ZG1 BLOCK DIAGRAM
BANIAS / ODEM

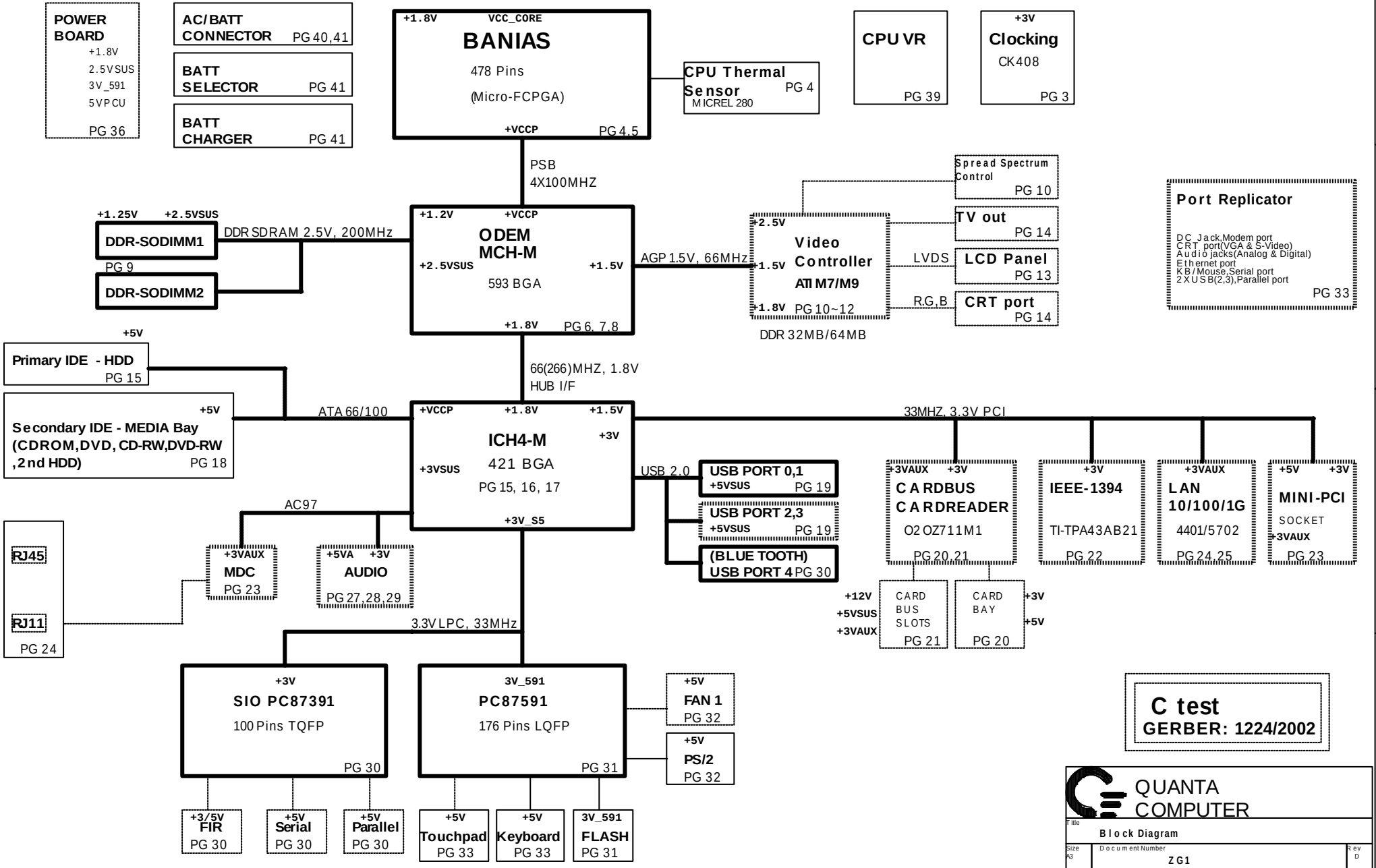

Voltage Rails		ON S0-S1	ON S3	ON S4	ON S5	Control signal
CPU_CORE	Core voltage for Processor	X				VR_ON
+VCCP	1.05V rail for Processor I/O	X				VR_ON
+1.2V	1.2V for ODEM Core	X				
+1.25V	1.25V for DDR Termination voltage	X	X			SUSON
+1.5V		X				
+1.5V		X				
+1.5V_S5		X	X	X		
+1.8V		X				
+2.5 VSUS		X	X			
+2.5V		X				
+2.5 VSUS	2.5V for DDR Termination voltage	X				MAINON
3V_591		X	X	X	X	
+3VSUS		X	X			
+3V		X				
5VPCU		X	X	X	X	
+5VSUS		X	X			
+5V		X				
+12V		X				
12VOUT		X	X	X	X	

External PCI Devices

Device	IDSEL#	REQ#/GNT#	Interrupts
LAN	AD18	0	PIRQD
CardBus	AD22	3	PIRQB
Mini-PCI	AD20	1	PIRQE/F
Mini-PCI LAN			
IEEE-1394 Controller	AD23	2	PIRQC
AGP VGA	AD17(INTERNAL)		PIRQA

EC SM Bus1 address

Device
Smart Battery
THERMAL SENSOR

ICH4-M SM Bus address

Device	
SODIMM	**1010 000X b**
Clock Gen	**1101 001x b**

QUANTA COMPUTER

Title	CLOCK GENERATOR
Size A3	Document Number ZG1
Rev D	
Date: Friday, December 27, 2002	Sheet 2 of 40

S2	S1	S0	CPU	3V66[0..4]	3V66_ 5/66IN
1	0	0	66	66IN	66 Input
1	0	1	100	66IN	66 Input
1	1	0	200	66IN	66 Input
1	1	1	133	66IN	66 Input
0	0	0	66	66	66 M
0	0	1	100	66	66 M
0	1	0	200	66	66 M
0	1	1	133	66	66 M

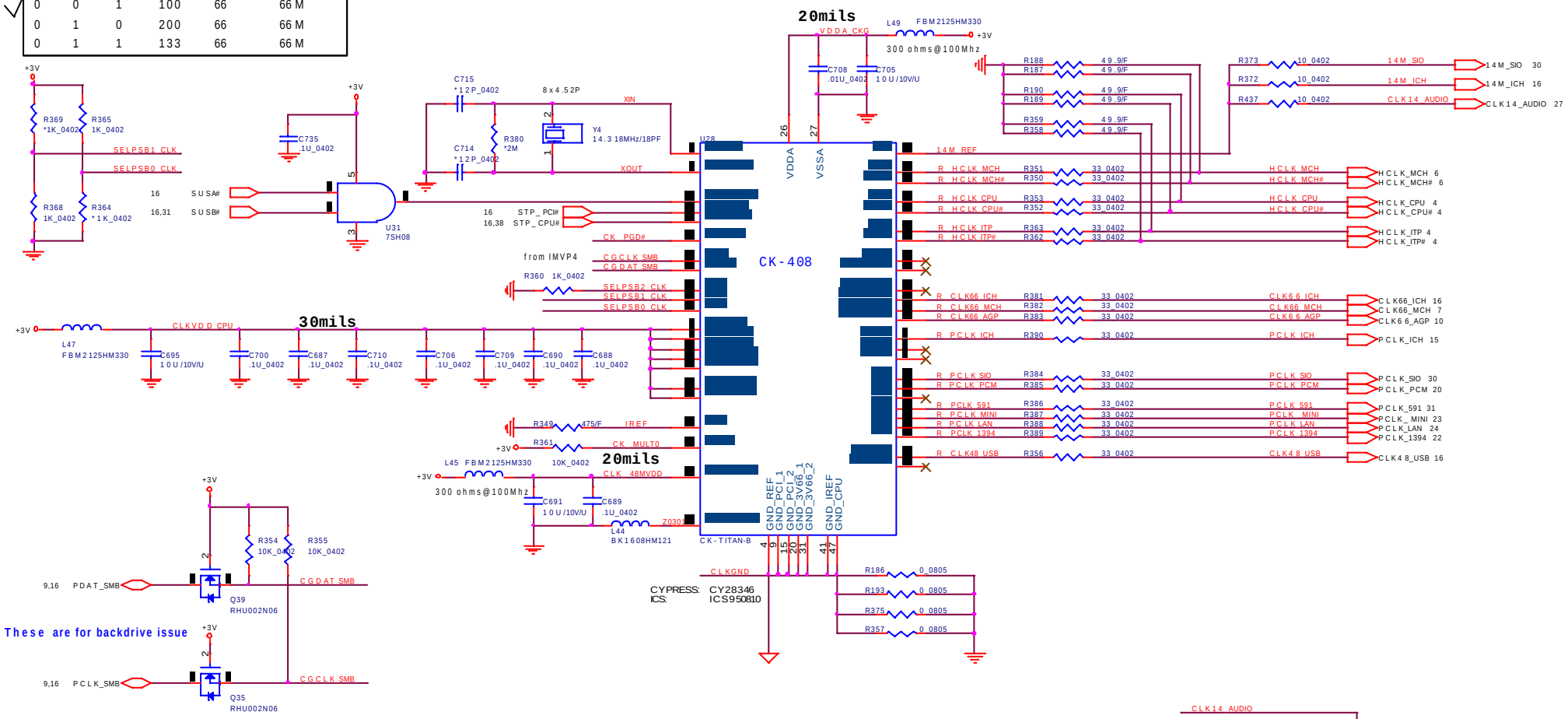

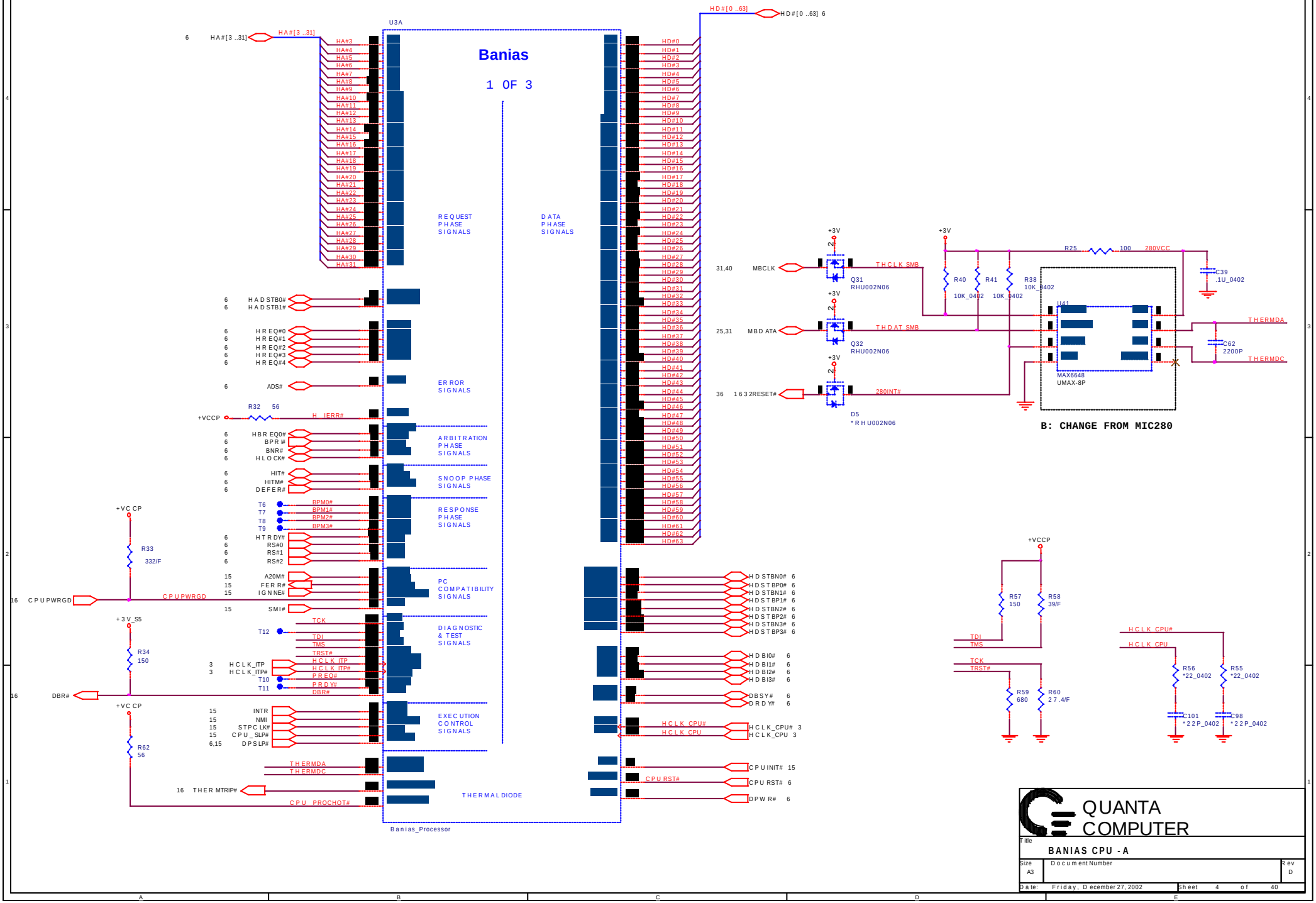
Banias
1 OF 3
U3A
REQUEST PHASE SIGNALS
DATA PHASE SIGNALS
ERROR SIGNALS
ARBITRATION PHASE SIGNALS
SNOOP PHASE SIGNALS
RESPONSE PHASE SIGNALS
PC COMPATIBILITY SIGNALS
DIAGNOSTIC & TEST SIGNALS
EXECUTION CONTROL SIGNALS
THERMAL DIODE
Banias_Processor
HA#[3..31]
HD#[0..63]
HADSTB0#
HADSTB1#
HREQ#0
HREQ#1
HREQ#2
HREQ#3
HREQ#4
ADS#
HIERR#
HBREQ0#
BPR#
BNR#
HLOCK#
HIT#
HITM#
DEFER#
BPM0#
BPM1#
BPM2#
BPM3#
HTRDY#
RS#0
RS#1
RS#2
A20M#
FERR#
IGNNE#
SMI#
TCK
TDI
TMS
TRST#
HCLK_ITP
HCLK_ITP#
PREQ#
PRDY#
DBR#
INTR
NMI
STPCLK#
CPU_SLP#
DPSLP#
THERMDA
THERMDC
THERMTRIP#
CPU_PROCHOT#
HDSTBN0#
HDSTBP0#
HDSTBN1#
HDSTBP1#
HDSTBN2#
HDSTBP2#
HDSTBN3#
HDSTBP3#
HDBI0#
HDBI1#
HDBI2#
HDBI3#
DBSY#
DRDY#
HCLK_CPU#
HCLK_CPU
CPUINIT#
CPURST#
DPWR#
CPUPWRGD
+VCCP
+3V_S5
R32 56
R33 332/F
R34 150
R62 56
MBCLK
MBDATA
1632RESET#
THCLK_SMB
THDAT_SMB
280INT#
Q31 RHU002N06
Q32 RHU002N06
D5 *RHU002N06
R40 10K_0402
R41 10K_0402
R38 10K_0402
R25 100 280VCC
C39 .1U_0402
C62 2200P
U41
MAX6648 UMAX-8P
B: CHANGE FROM MIC280
R57 150
R58 39/F
R59 680
R60 27.4/F
R56 *22_0402
R55 *22_0402
C101 *22P_0402
C98 *22P_0402
QUANTA COMPUTER
Title
BANIAS CPU -A
Size A3
Document Number
Rev D
Date: Friday, December 27, 2002
Sheet 4 of 40

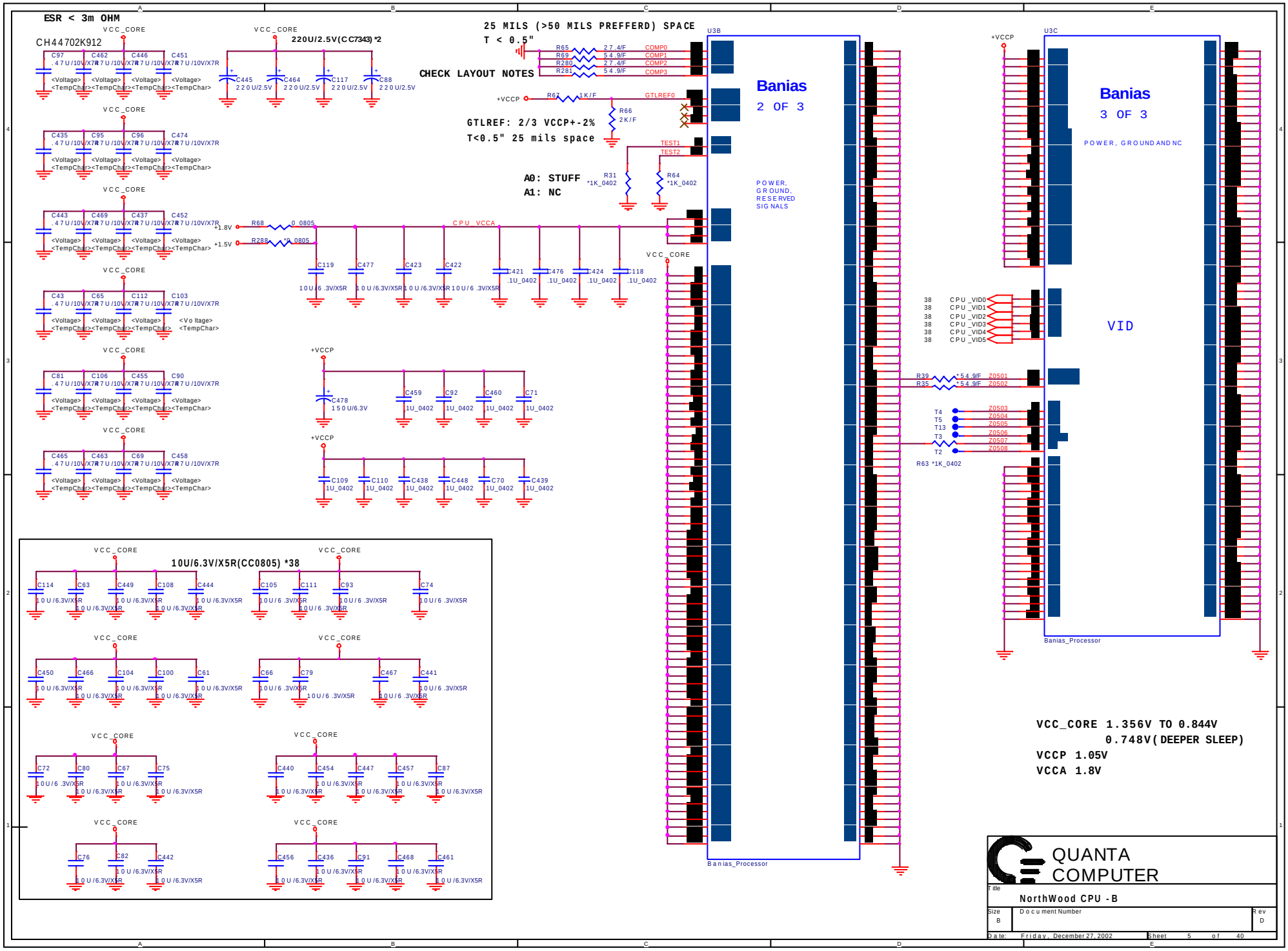
ESR < 3m OHM
CH44702K912
VCC_CORE
220U/2.5V(CC7343) *2
25 MILS (>50 MILS PREFFERD) SPACE
T < 0.5"
CHECK LAYOUT NOTES
GTLREF: 2/3 VCCP+-2%
T<0.5" 25 mils space
A0: STUFF
A1: NC
U3B
Banias
2 OF 3
POWER, GROUND, RESERVED SIGNALS
U3C
Banias
3 OF 3
POWER, GROUND AND NC
VID
Banias_Processor
CPU_VCCA
+VCCP
10U/6.3V/X5R(CC0805) *38
VCC_CORE 1.356V TO 0.844V
0.748V(DEEPER SLEEP)
VCCP 1.05V
VCCA 1.8V
QUANTA COMPUTER
Title
NorthWood CPU -B
Size B
Document Number
Rev D
Date: Friday, December 27, 2002
Sheet 5 of 40

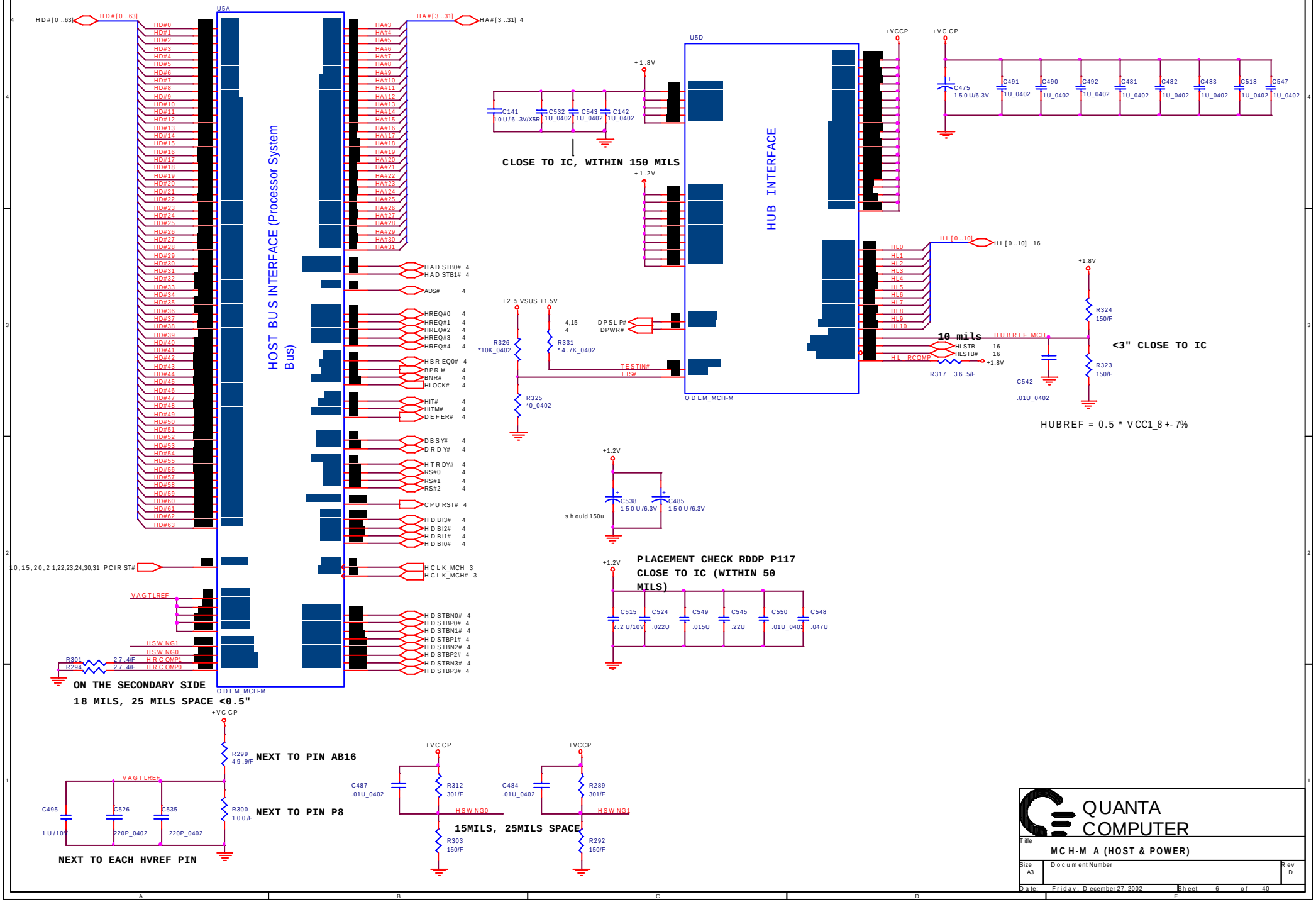
U5A
HOST BUS INTERFACE (Processor System Bus)
ODEM_MCH-M
U5D
HUB INTERFACE
ODEM_MCH-M
HD#[0..63]
HA#[3..31]
HAD STB0# 4
HAD STB1# 4
ADS# 4
HREQ#0 4
HREQ#1 4
HREQ#2 4
HREQ#3 4
HREQ#4 4
HBREQ0# 4
BPRI# 4
BNR# 4
HLOCK# 4
HIT# 4
HITM# 4
DEFER# 4
DBSY# 4
DRDY# 4
HTRDY# 4
RS#0 4
RS#1 4
RS#2 4
CPURST# 4
HDBI3# 4
HDBI2# 4
HDBI1# 4
HDBI0# 4
HCLK_MCH 3
HCLK_MCH# 3
HDSTBN0# 4
HDSTBP0# 4
HDSTBN1# 4
HDSTBP1# 4
HDSTBN2# 4
HDSTBP2# 4
HDSTBN3# 4
HDSTBP3# 4
PCIRST#
VAGTLREF
HSWNG1
HSWNG0
HRCOMP1
HRCOMP0
R301 27.4/F
R294 27.4/F
ON THE SECONDARY SIDE
18 MILS, 25 MILS SPACE <0.5"
+1.8V
C141 10U/6.3V/X5R
C532 .1U_0402
C543 .1U_0402
C142 .1U_0402
CLOSE TO IC, WITHIN 150 MILS
+1.2V
+2.5VSUS +1.5V
R326 *10K_0402
R331 *4.7K_0402
R325 *0_0402
DPSLP#
DPWR#
TESTIN#
ETS#
+VCCP
+VCCP
C475 150U/6.3V
C491 1U_0402
C490 1U_0402
C492 1U_0402
C481 1U_0402
C482 1U_0402
C483 1U_0402
C518 1U_0402
C547 1U_0402
HL[0..10]
HL[0..10] 16
HLSTB 16
HLSTB# 16
HL_RCOMP
R317 36.5/F
10 mils
HUBREF_MCH
R324 150/F
R323 150/F
C542 .01U_0402
<3" CLOSE TO IC
HUBREF = 0.5 * VCC1_8 +-7%
C538 150U/6.3V
C485 150U/6.3V
should 150u
PLACEMENT CHECK RDDP P117
CLOSE TO IC (WITHIN 50 MILS)
C515 2.2U/10V
C524 .022U
C549 .015U
C545 .22U
C550 .01U_0402
C548 .047U
R299 49.9/F
NEXT TO PIN AB16
R300 100/F
NEXT TO PIN P8
C495 1U/10V
C526 220P_0402
C535 220P_0402
NEXT TO EACH HVREF PIN
C487 .01U_0402
R312 301/F
R303 150/F
C484 .01U_0402
R289 301/F
R292 150/F
15MILS, 25MILS SPACE
QUANTA COMPUTER
Title
MCH-M_A (HOST & POWER)
Size A3
Document Number
Rev D
Date: Friday, December 27, 2002
Sheet 6 of 40

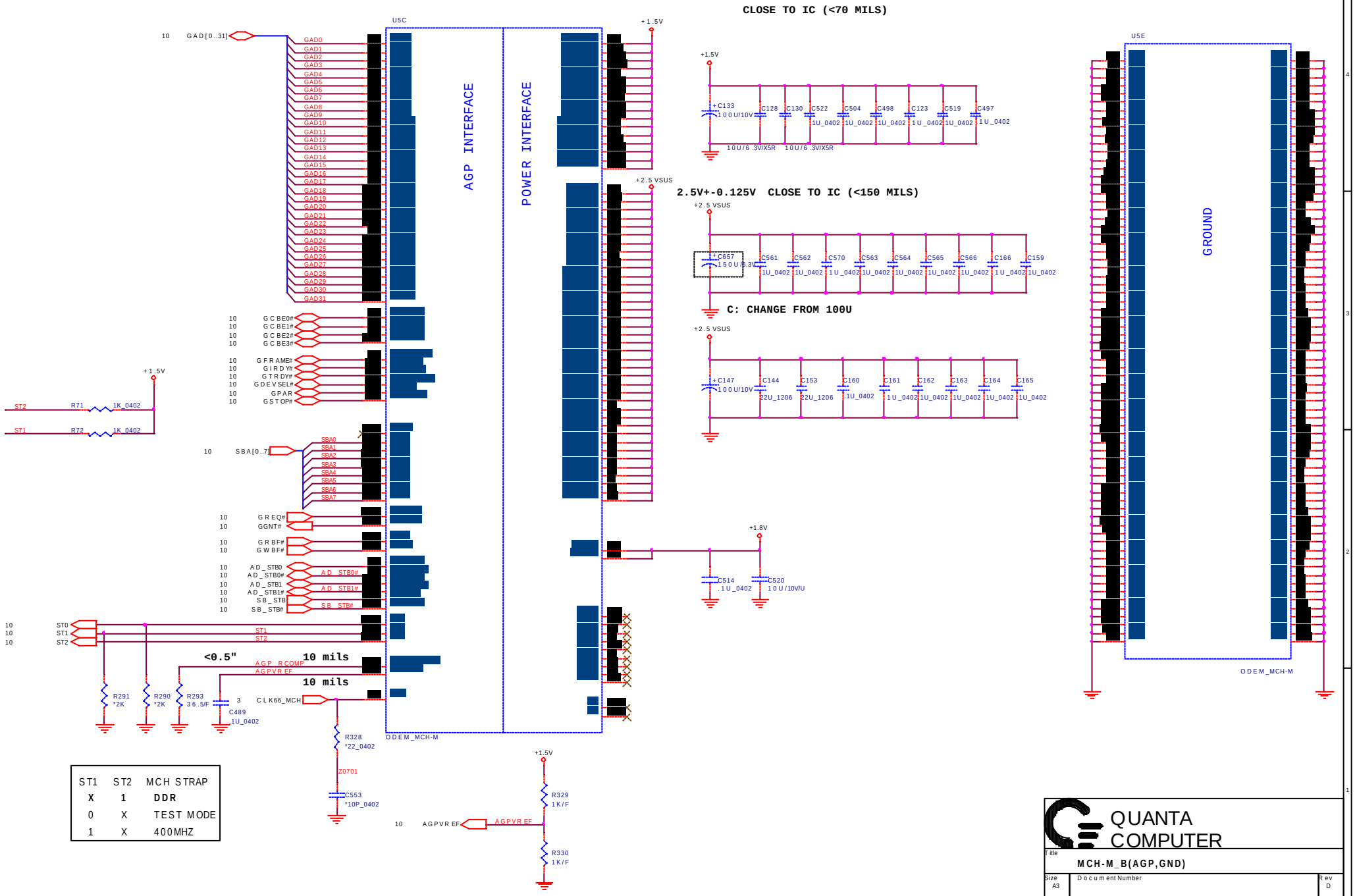

ST1	ST2	MCH STRAP
X	1	DDR
0	X	TEST MODE
1	X	400MHZ

QUANTA COMPUTER

Title: MCH-M_B(AGP,GND)

Size: A3 | Document Number | Rev: D

Date: Friday, December 27, 2002 | Sheet 7 of 40

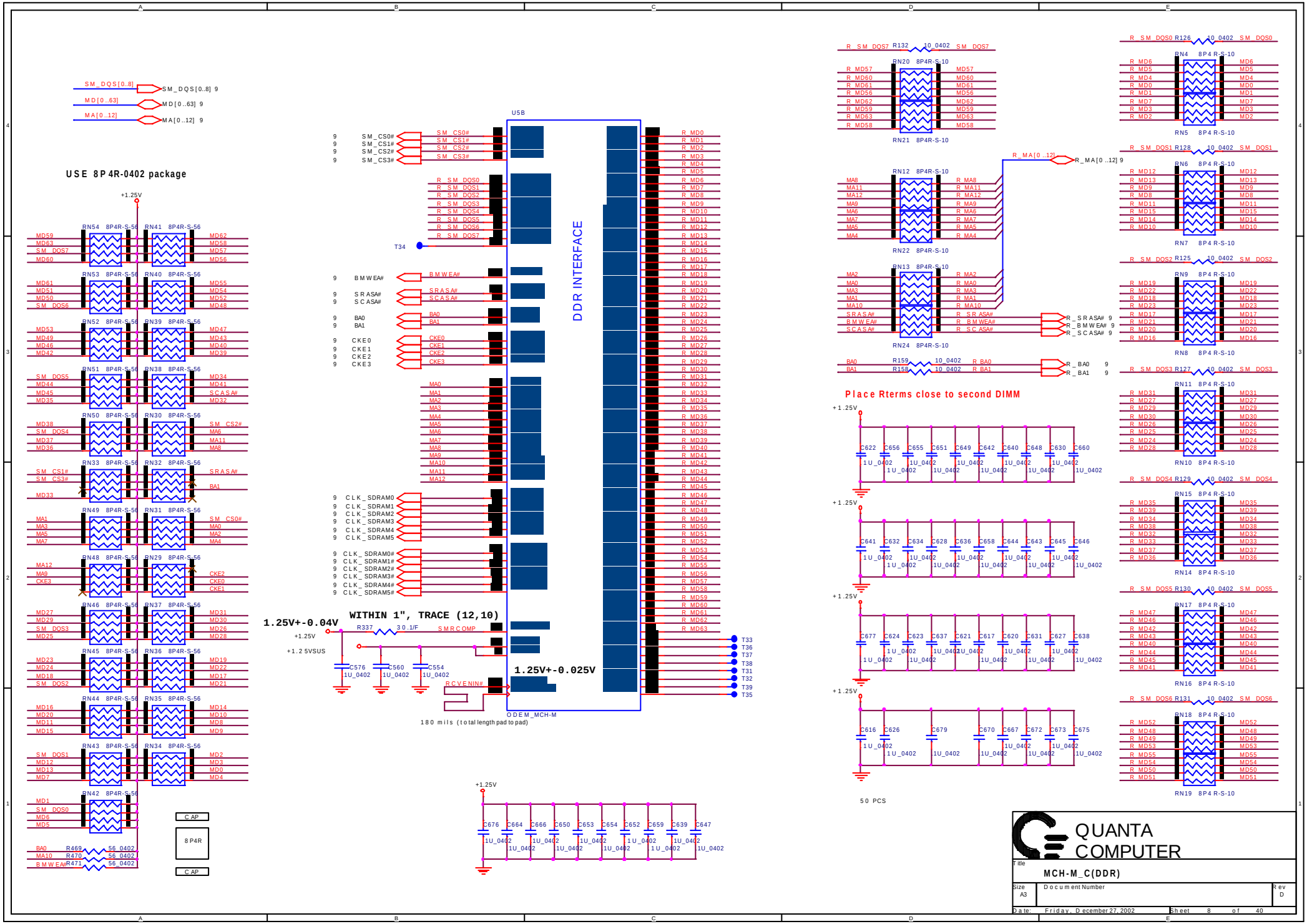
USE 8P4R-0402 package
DDR INTERFACE
U5B
ODEM_MCH-M
WITHIN 1", TRACE (12,10)
180 mils (total length pad to pad)
1.25V+-0.04V
1.25V+-0.025V
Place Rterms close to second DIMM
50 PCS
QUANTA COMPUTER
MCH-M_C(DDR)
Size A3
Document Number
Rev D
Date: Friday, December 27, 2002
Sheet 8 of 40

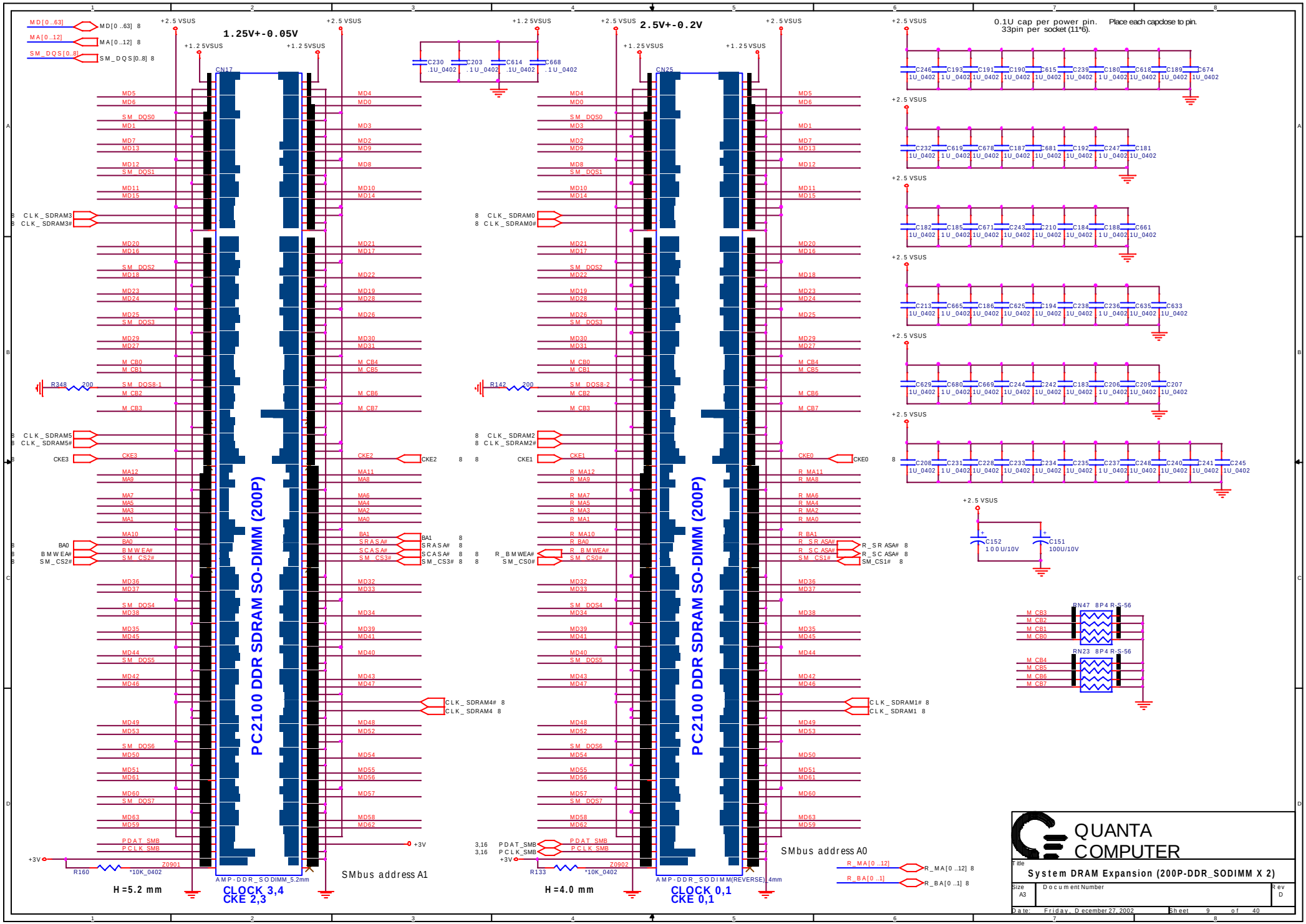
1.25V+-0.05V
2.5V+-0.2V
0.1U cap per power pin. Place each capclose to pin.
33pin per socket (11*6).
CN17
CN25
PC2100 DDR SDRAM SO-DIMM (200P)
PC2100 DDR SDRAM SO-DIMM (200P)
AMP-DDR_SODIMM_5.2mm
AMP-DDR_SODIMM(REVERSE)_4mm
H=5.2 mm
H=4.0 mm
CLOCK 3,4
CKE 2,3
CLOCK 0,1
CKE 0,1
SMbus address A1
SMbus address A0
QUANTA COMPUTER
System DRAM Expansion (200P-DDR_SODIMM X 2)
Size A3
Document Number
Rev D
Date: Friday, December 27, 2002
Sheet 9 of 40

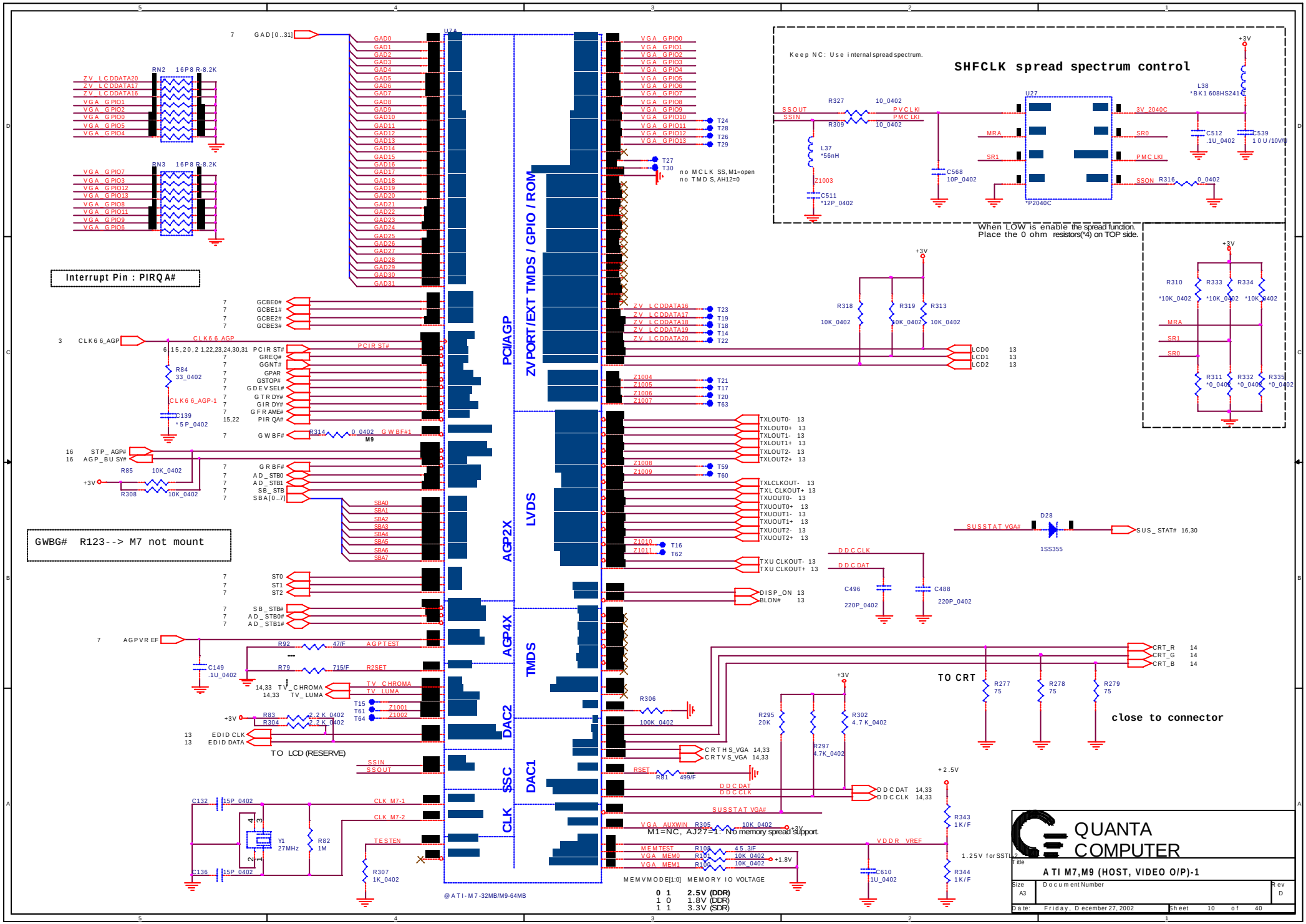
SHFCLK spread spectrum control
Keep NC: Use internal spread spectrum.
When LOW is enable the spread function.
Place the 0 ohm resistors(*4) on TOP side.
Interrupt Pin : PIRQA#
GWBG# R123--> M7 not mount
TO LCD (RESERVE)
TO CRT
close to connector
M1=NC, AJ27=1: No memory spread support.
@ATI-M7-32MB/M9-64MB
MEMVMODE[1:0] MEMORY IO VOLTAGE
0 1 2.5V (DDR)
1 0 1.8V (DDR)
1 1 3.3V (SDR)
PCI/AGP
ZVPORT/EXT TMDS / GPIO / ROM
AGP2X
LVDS
AGP4X
TMDS
DAC2
SSC
DAC1
CLK
QUANTA COMPUTER
ATI M7,M9 (HOST, VIDEO O/P)-1
Size A3
Document Number
Rev D
Date: Friday, December 27, 2002
Sheet 10 of 40

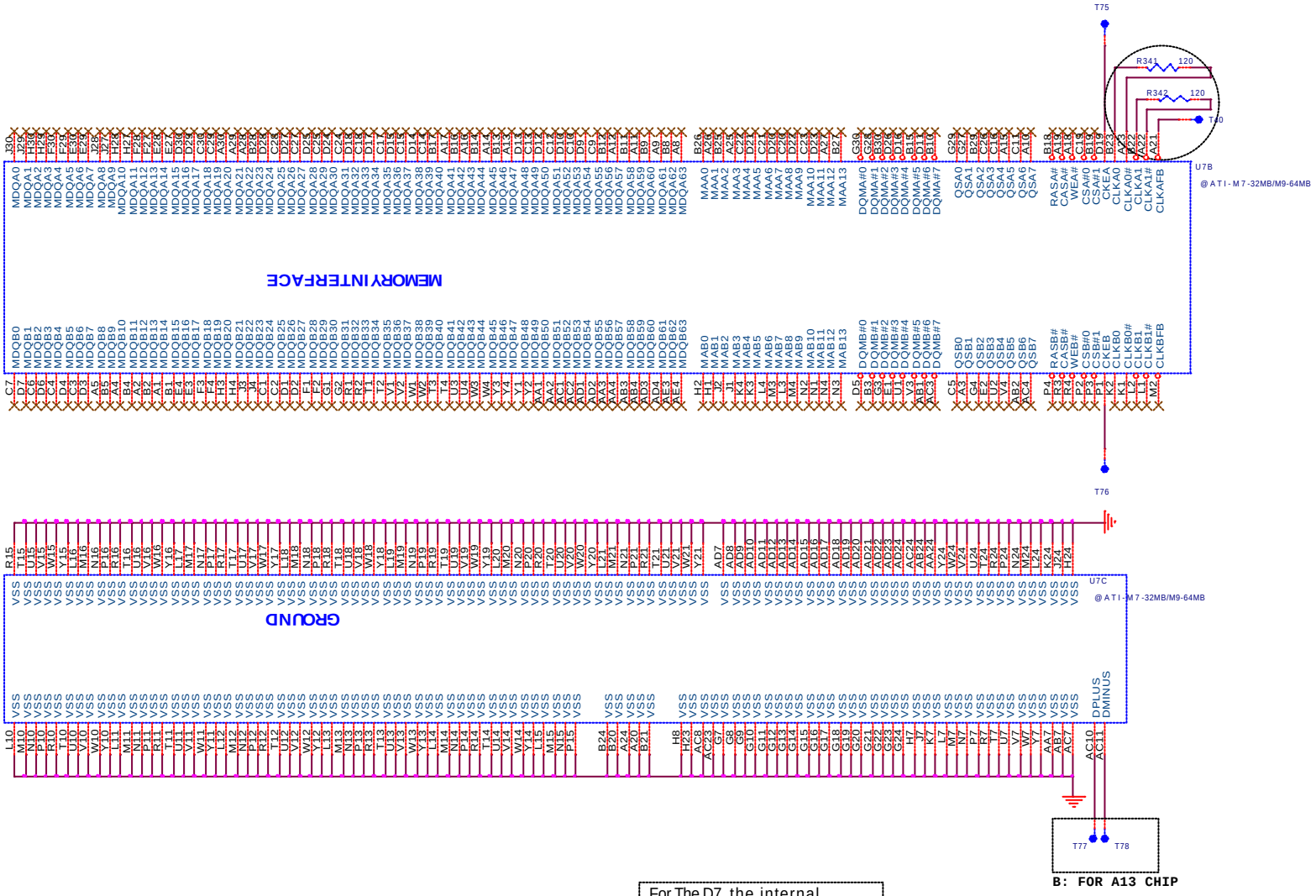

B: FOR A13 CHIP

For The D7, the internal memory is on the A channel. Do not populate Termination or momory on this channel if you are making a D7 Board or Board variant.

QUANTA COMPUTER

Title	ATI M7,M9	
Size A3	Document Number ZG1	Rev D
Date: Friday, December 27, 2002	Sheet 11 of 40	

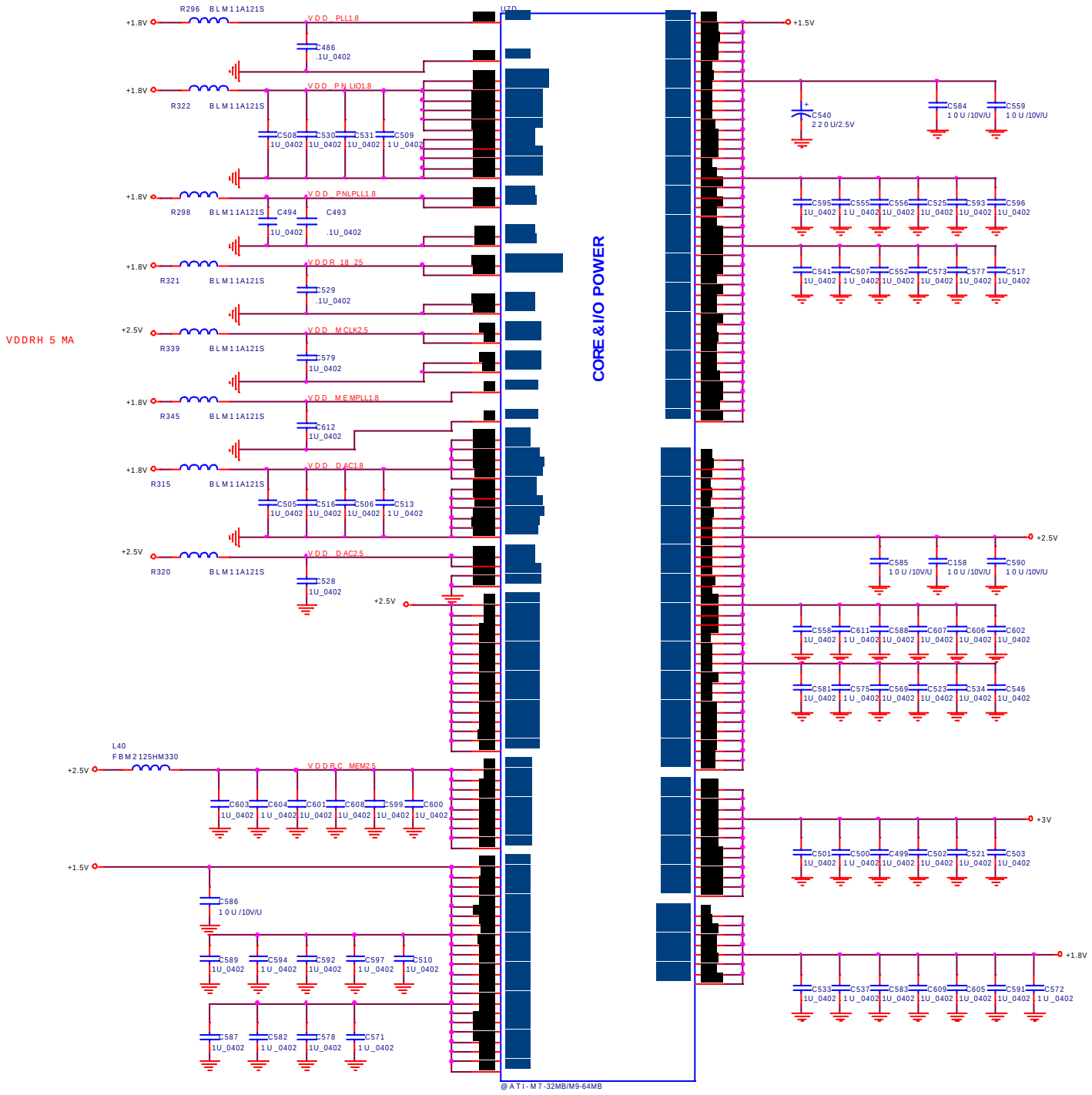

QUANTA COMPUTER

Title: ATI M7, M9

Size: A3 | Document Number | Rev: D

Date: Friday, December 27, 2002 | Sheet 12 of 40

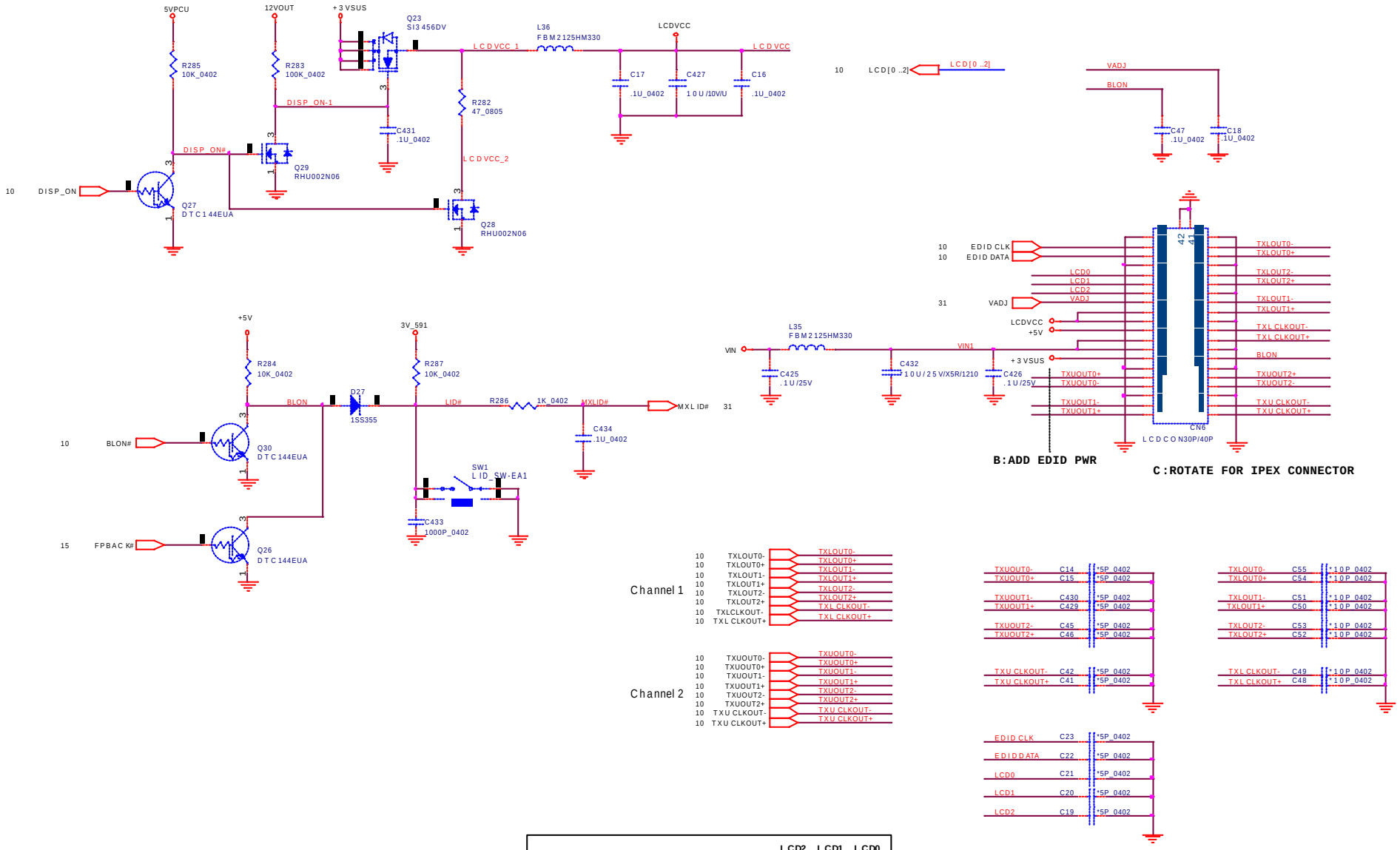

				LCD2	LCD1	LCD0
ID1	QDI	14.1" XGA	QD141X1LH12	0	0	1
ID2	LG	14.1" XGA	LP141X13	0	1	0
ID3	LG	15" XGA	LP150X05-A2C1	0	1	1
ID4	CPT	15" XGA	CLAA150XH01	1	0	0
ID5	CPT	15" SXGA+	CLAA150PA01	1	0	1
ID6	HannStar	15" SXGA+	HSD150PK12	1	1	0
ID7				1	1	1

QUANTA COMPUTER

Title: LCD CONN & LCDVCC

Size: A3 | Document Number | Rev: D

Date: Friday, December 27, 2002 | Sheet 13 of 40

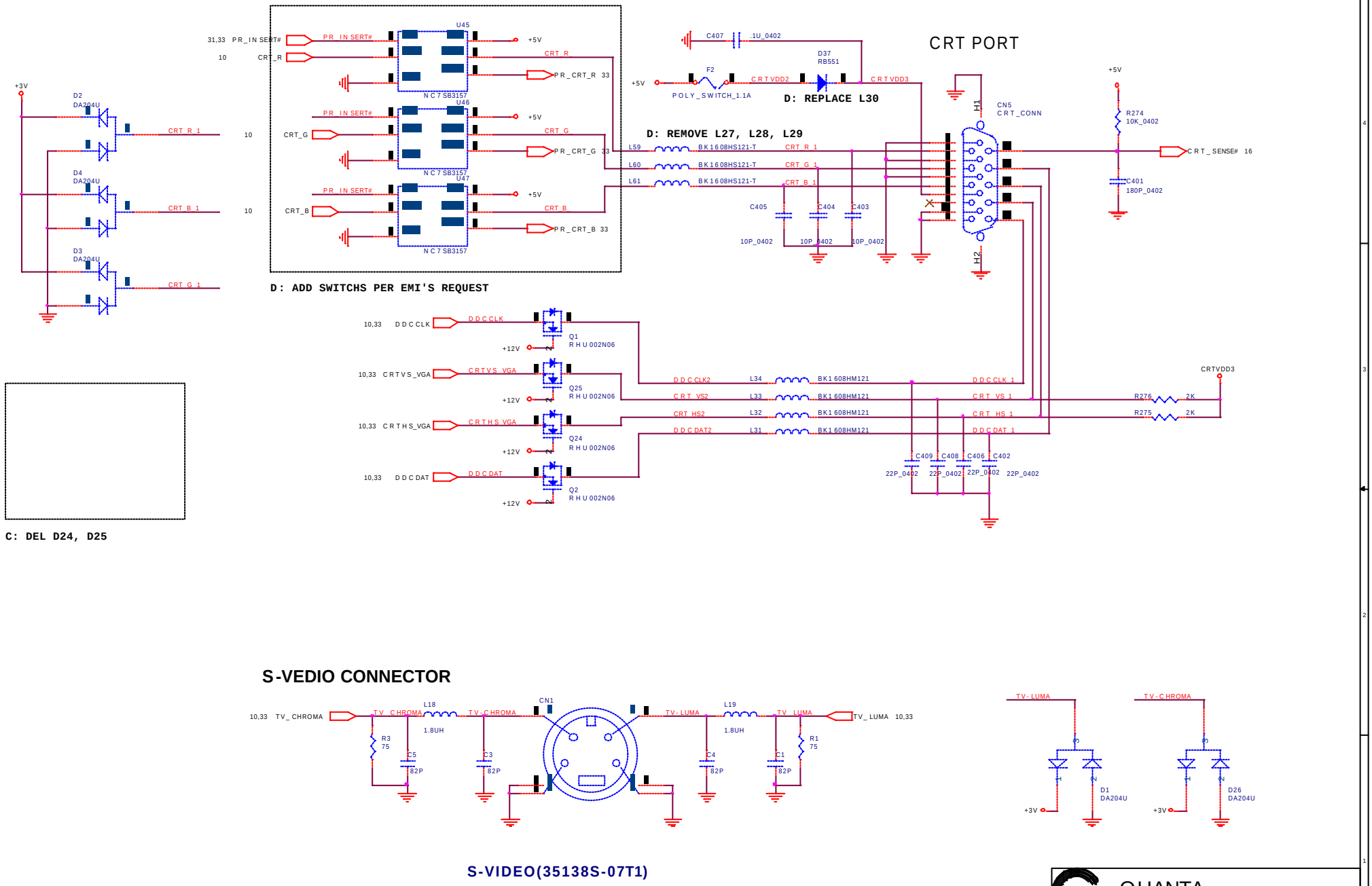
CRT PORT
D: ADD SWITCHS PER EMI'S REQUEST
D: REMOVE L27, L28, L29
D: REPLACE L30
C: DEL D24, D25
U45
U46
U47
NC7SB3157
CN5
CRT_CONN
POLY_SWITCH_1.1A
BK1608HS121-T
BK1608HM121
RHU002N06
CRTVDD3
CRT_SENSE# 16
S-VEDIO CONNECTOR
CN1
TV_CHROMA
TV_LUMA
L18
L19
1.8UH
R3 75
R1 75
C5 82P
C3 82P
C4 82P
C1 82P
D1 DA204U
D26 DA204U
S-VIDEO(35138S-07T1)
QUANTA COMPUTER
Title
CRT & TV DECORDER
Size A3
Document Number
Rev D
Date: Friday, December 27, 2002
Sheet 14 of 40

ICH HUB

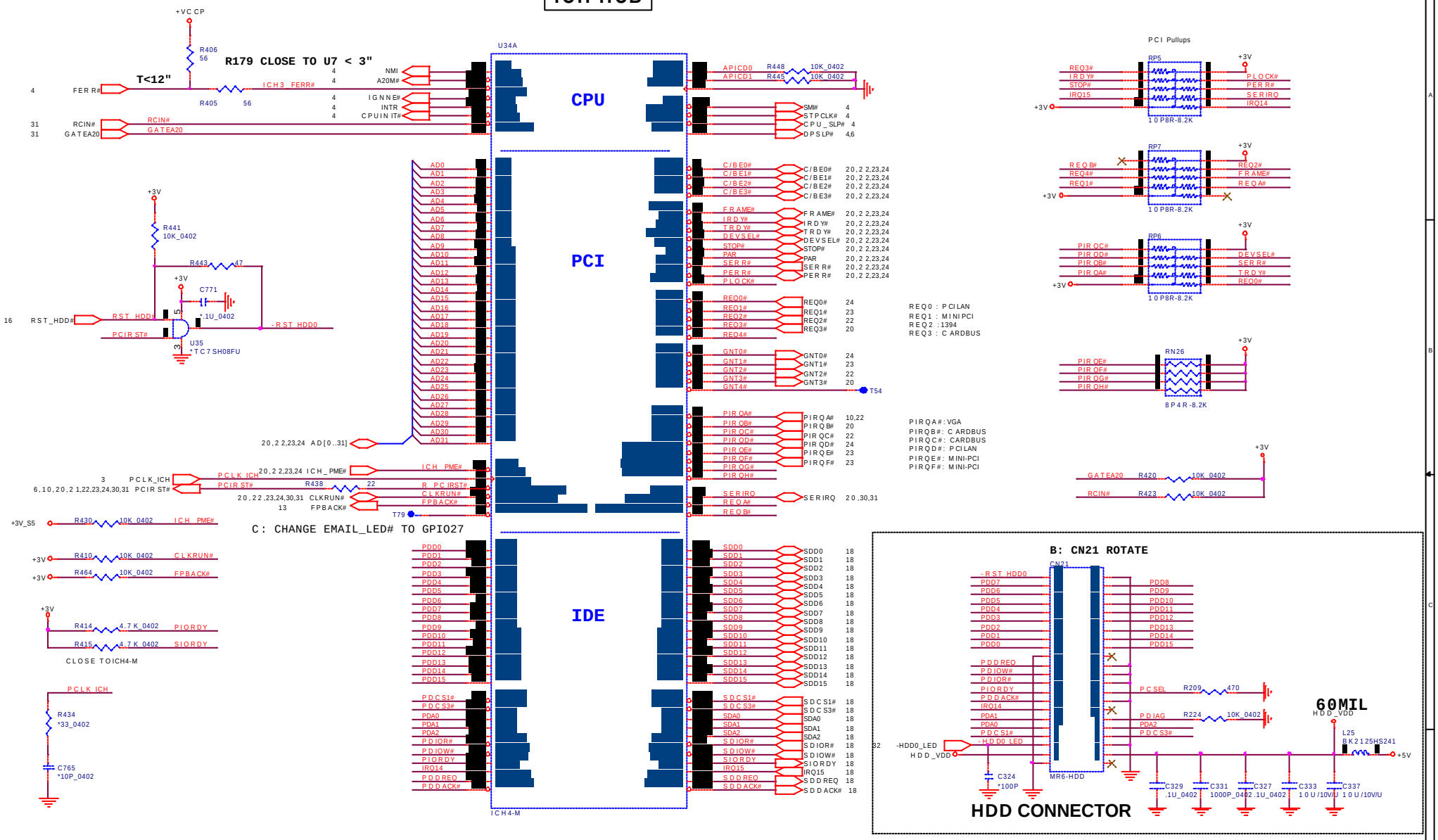

QUANTA COMPUTER

Title: ICH4-M (CPU,PCI,IDE)

Size: A3 | Document Number | Rev: D

Date: Friday, December 27, 2002 | Sheet 15 of 40

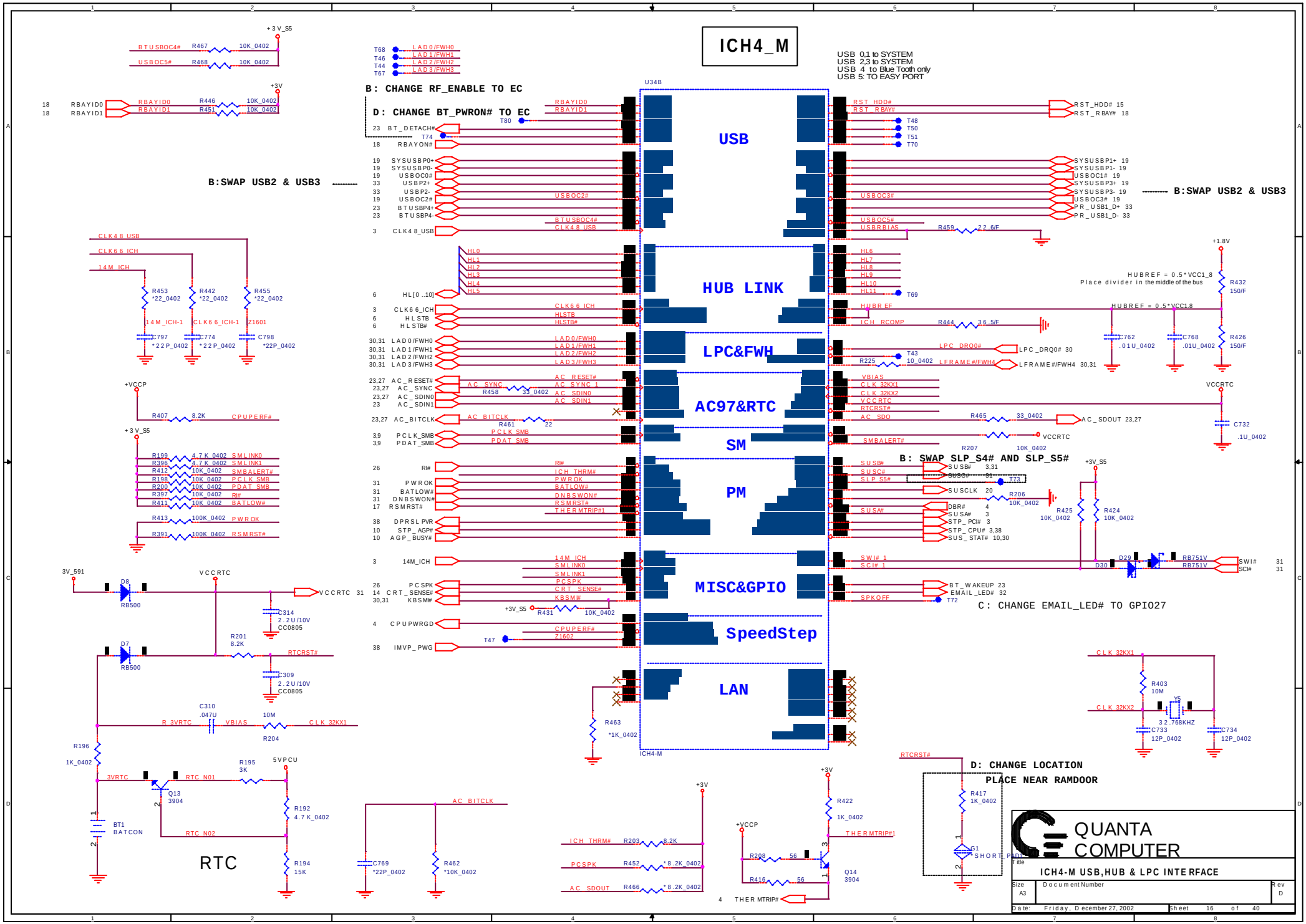
ICH4_M
USB 0,1 to SYSTEM
USB 2,3 to SYSTEM
USB 4 to Blue Tooth only
USB 5: TO EASY PORT
B: CHANGE RF_ENABLE TO EC
D: CHANGE BT_PWRON# TO EC
B:SWAP USB2 & USB3
B:SWAP USB2 & USB3
B: SWAP SLP_S4# AND SLP_S5#
C: CHANGE EMAIL_LED# TO GPIO27
D: CHANGE LOCATION
PLACE NEAR RAMDOOR
HUBREF = 0.5*VCC1_8
Place divider in the middle of the bus
USB
HUB LINK
LPC&FWH
AC97&RTC
SM
PM
MISC&GPIO
SpeedStep
LAN
RTC
QUANTA COMPUTER
ICH4-M USB,HUB & LPC INTERFACE
Size A3
Document Number
Rev D
Date: Friday, December 27, 2002
Sheet 16 of 40

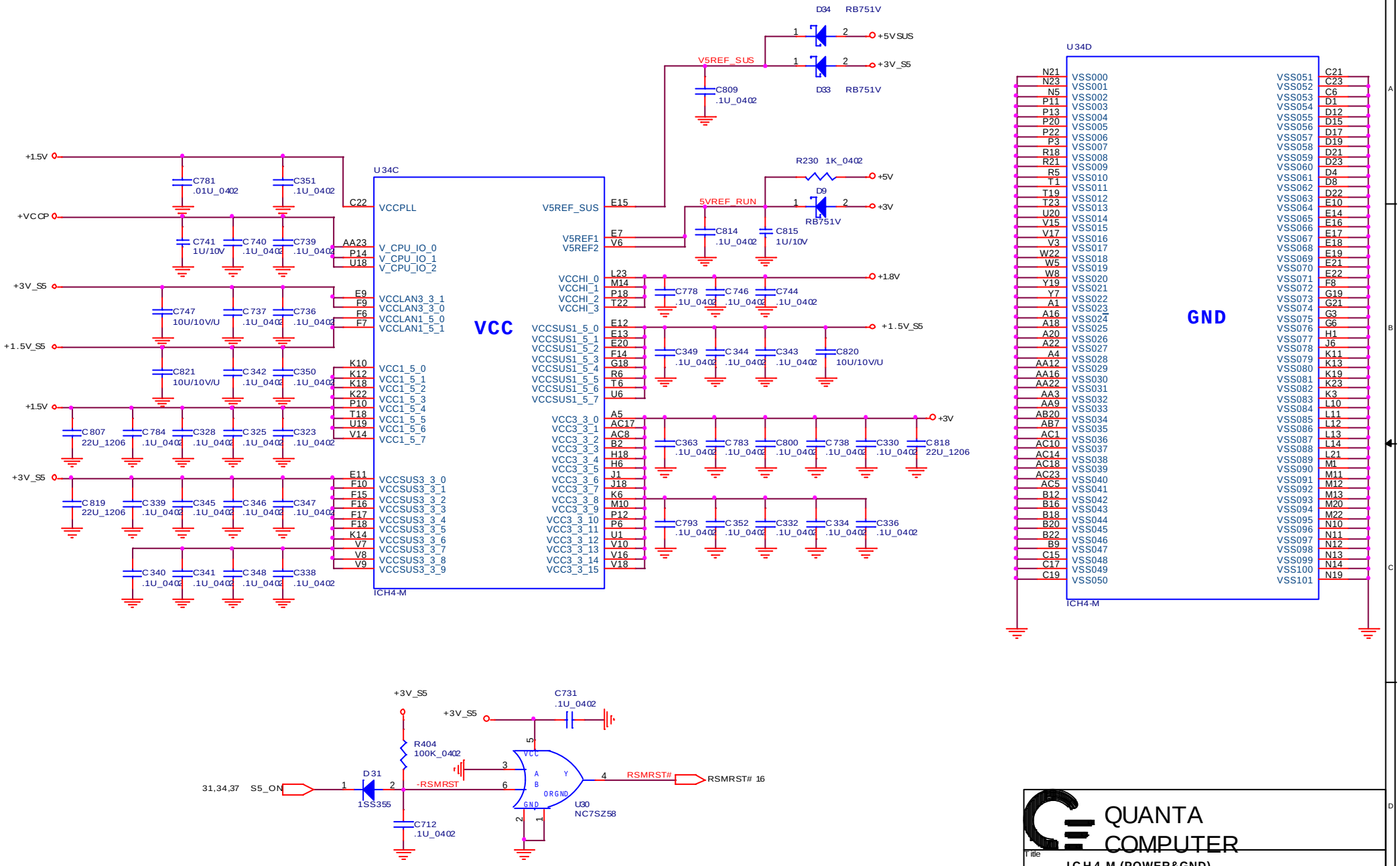

QUANTA COMPUTER

Title: ICH4-M (POWER&GND)

Size: Custom | Document Number | Rev D

Date: Friday, December 27, 2002 | Sheet 17 of 40

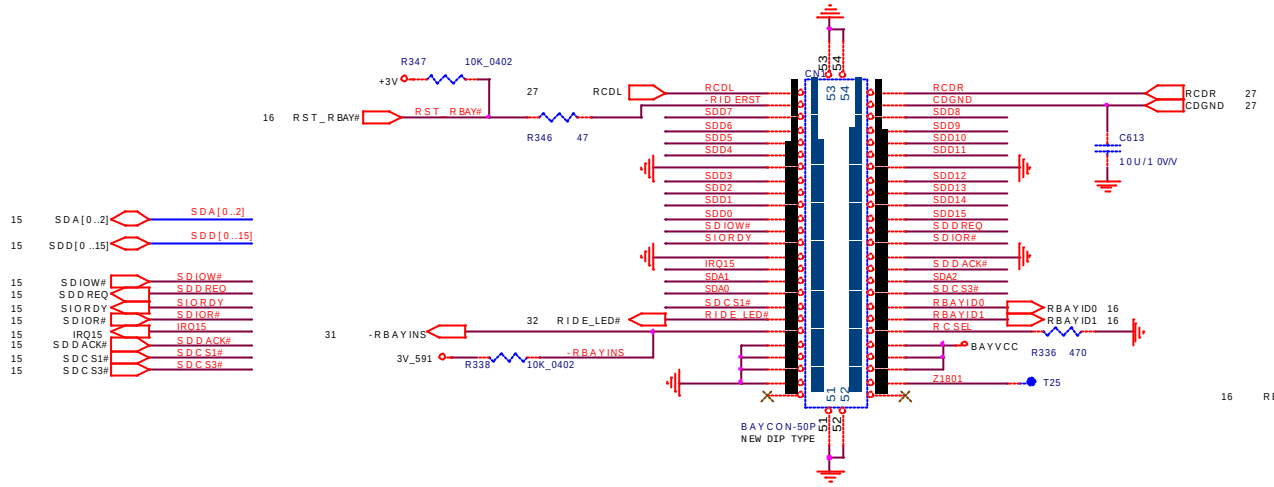

BAY POWER CONTROL & RESET

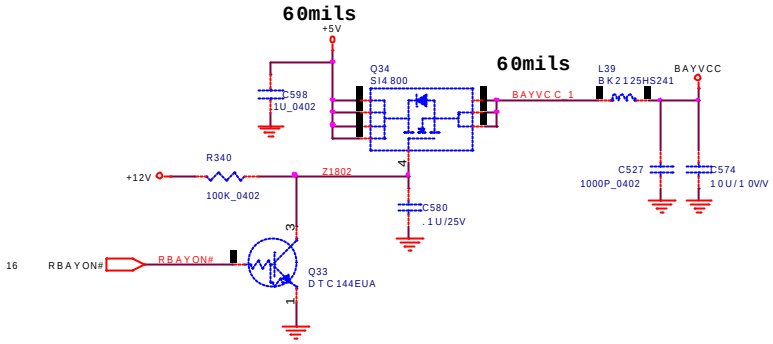

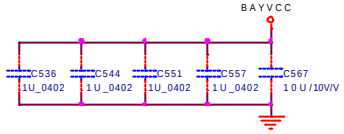

MEDIA BAY(HDD, CD, DVD, FDD)

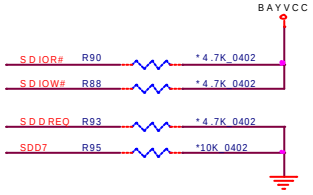

BAY ID STATUS

RBAYID0	RBAYID1	STATUS
0	0	FDD
0	1	HDD
1	0	CD/DVD

QUANTA COMPUTER

Title: DEVICE BAY

Size: A3 | Document Number | Rev: D

Date: Friday, December 27, 2002 | Sheet 18 of 40

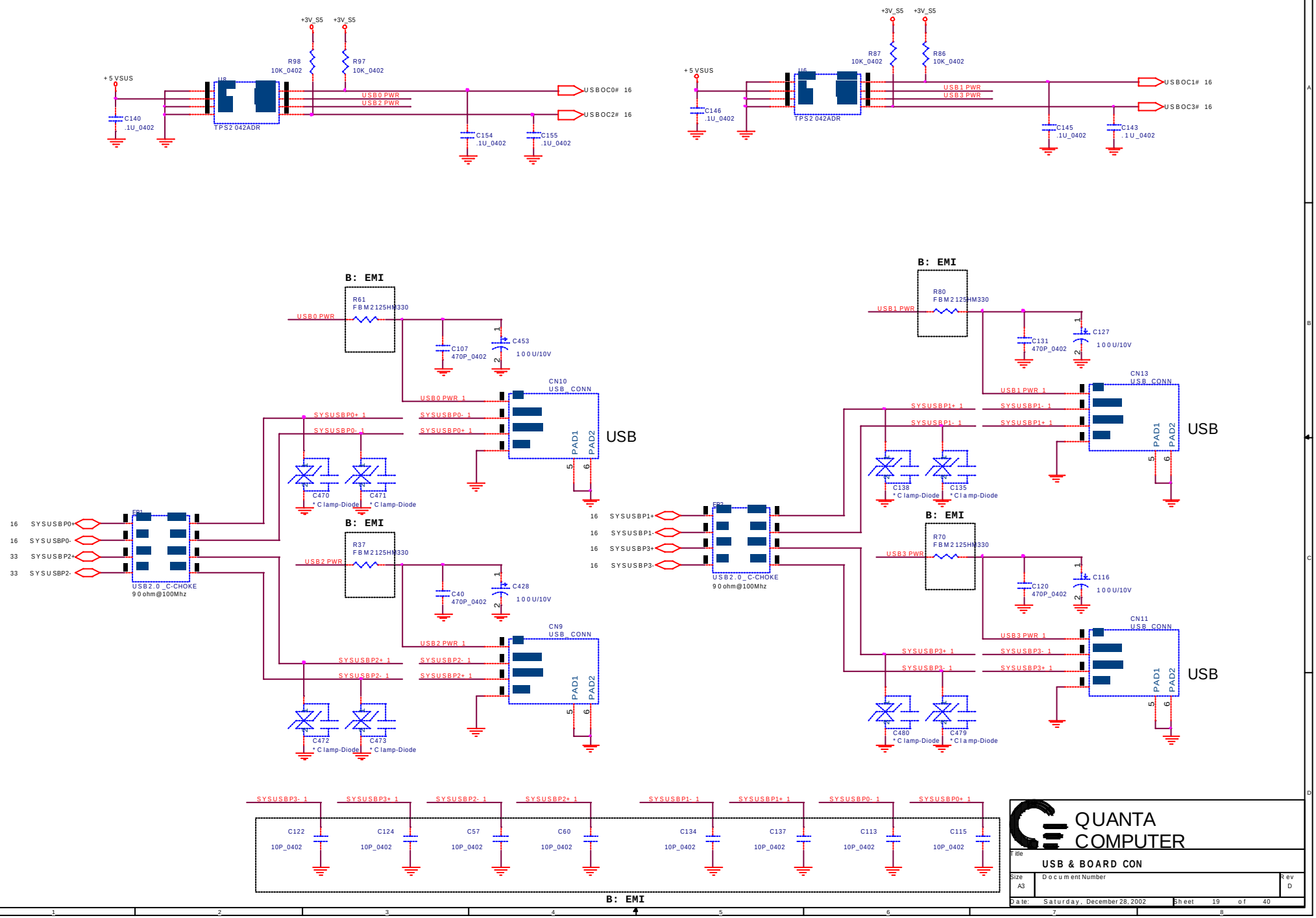
+3V_S5
+3V_S5
R98
10K_0402
R97
10K_0402
+5VSUS
U8
TPS2042ADR
C140
.1U_0402
USB0 PWR
USB2 PWR
USBOC0# 16
USBOC2# 16
C154
.1U_0402
C155
.1U_0402
R87
10K_0402
R86
10K_0402
U6
C146
.1U_0402
USB1 PWR
USB3 PWR
USBOC1# 16
USBOC3# 16
C145
.1U_0402
C143
.1U_0402
B: EMI
R61
FBM2125HM330
USB0 PWR
C107
470P_0402
C453
100U/10V
CN10
USB_CONN
USB0 PWR 1
SYSUSBP0+ 1
SYSUSBP0- 1
PAD1
PAD2
USB
C470
C471
* Clamp-Diode
B: EMI
R37
FBM2125HM330
USB2 PWR
C40
470P_0402
C428
100U/10V
CN9
USB_CONN
USB2 PWR 1
SYSUSBP2+ 1
SYSUSBP2- 1
C472
C473
* Clamp-Diode
16 SYSUSBP0+
16 SYSUSBP0-
33 SYSUSBP2+
33 SYSUSBP2-
FB1
USB2.0_C-CHOKE
90ohm@100Mhz
B: EMI
R80
FBM2125HM330
USB1 PWR
C131
470P_0402
C127
100U/10V
CN13
USB_CONN
USB1 PWR 1
SYSUSBP1+ 1
SYSUSBP1- 1
C138
C135
* Clamp-Diode
16 SYSUSBP1+
16 SYSUSBP1-
16 SYSUSBP3+
16 SYSUSBP3-
FB2
USB2.0_C-CHOKE
90ohm@100Mhz
B: EMI
R70
FBM2125HM330
USB3 PWR
C120
470P_0402
C116
100U/10V
CN11
USB_CONN
USB3 PWR 1
SYSUSBP3+ 1
SYSUSBP3- 1
C480
C479
* Clamp-Diode
SYSUSBP3- 1
SYSUSBP3+ 1
SYSUSBP2- 1
SYSUSBP2+ 1
SYSUSBP1- 1
SYSUSBP1+ 1
SYSUSBP0- 1
SYSUSBP0+ 1
C122
C124
C57
C60
C134
C137
C113
C115
10P_0402
B: EMI
QUANTA COMPUTER
Title
USB & BOARD CON
Size
A3
Document Number
Rev
D
Date: Saturday, December 28, 2002
Sheet 19 of 40

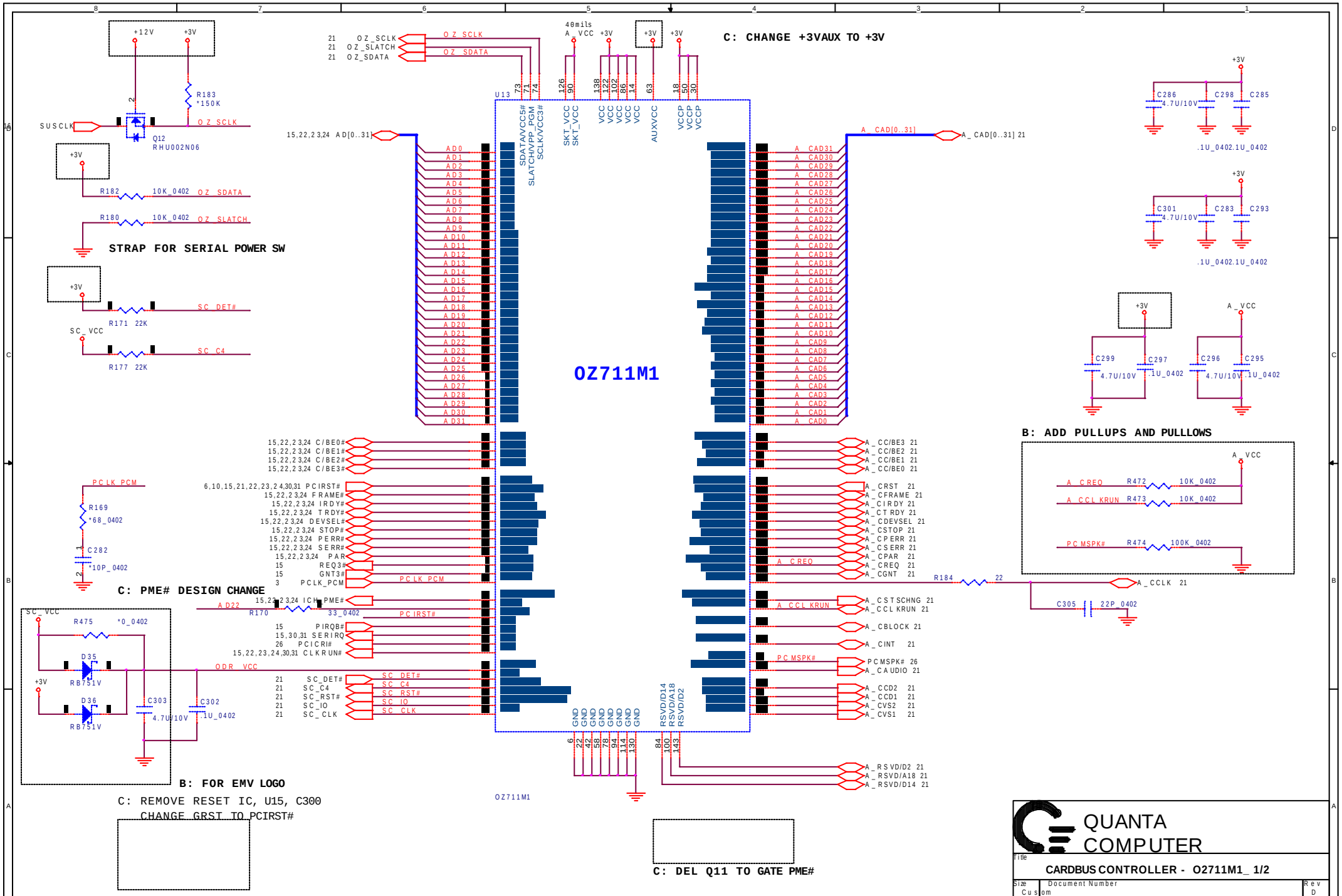
C: CHANGE +3VAUX TO +3V
STRAP FOR SERIAL POWER SW
OZ711M1
B: ADD PULLUPS AND PULLLOWS
C: PME# DESIGN CHANGE
B: FOR EMV LOGO
C: REMOVE RESET IC, U15, C300
CHANGE GRST TO PCIRST#
C: DEL Q11 TO GATE PME#
QUANTA COMPUTER
CARDBUS CONTROLLER - O2711M1_ 1/2
Size Custom
Document Number
Rev D
Date: Friday, December 27, 2002
Sheet 20 of 40

CARDBUS Slot

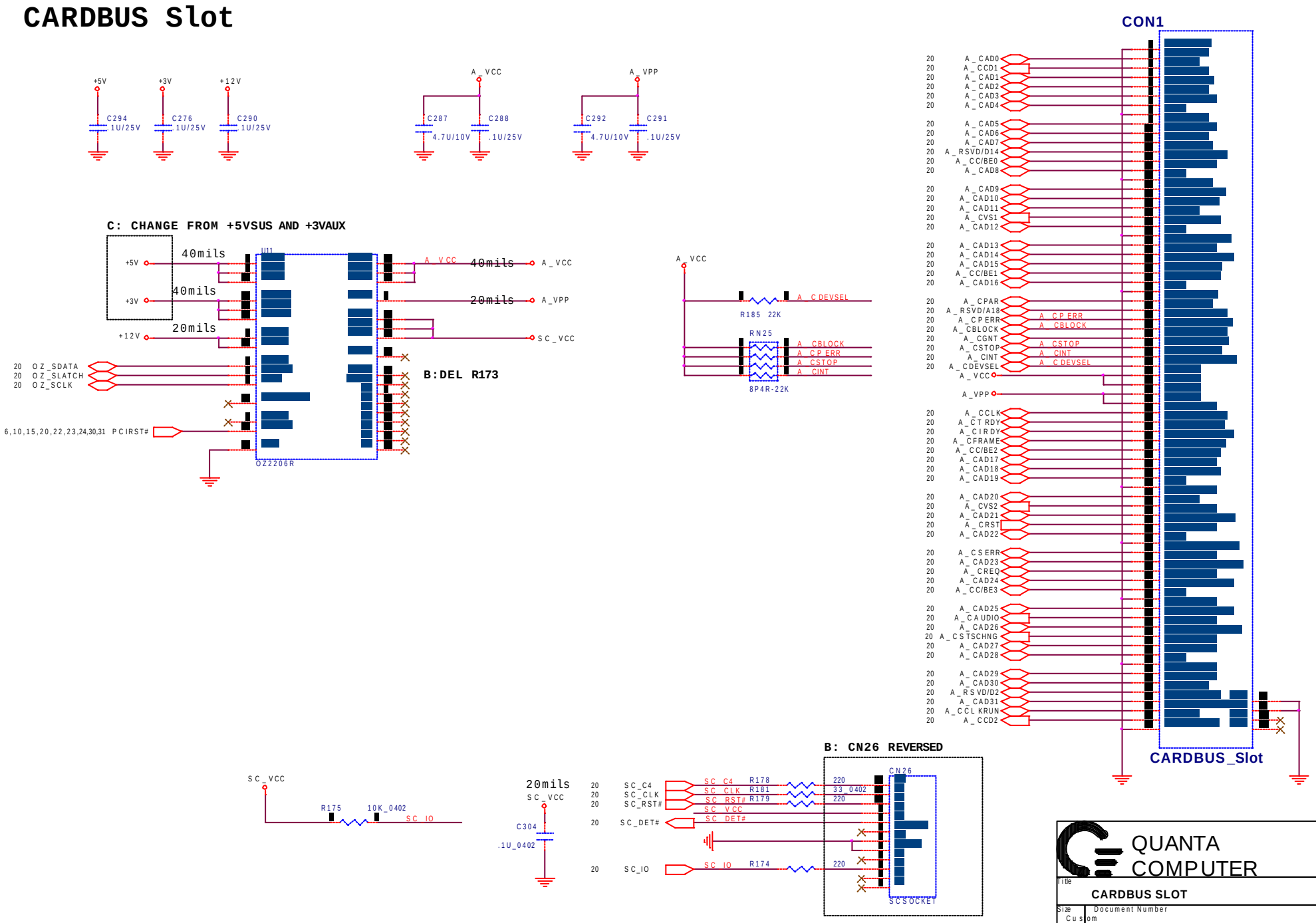

QUANTA COMPUTER

Title: CARDBUS SLOT

Size: Custom | Document Number | Rev D

Date: Friday, December 27, 2002 | Sheet 21 of 40

IEEE 1394 CONTROLLER - TI_TSB43AB21

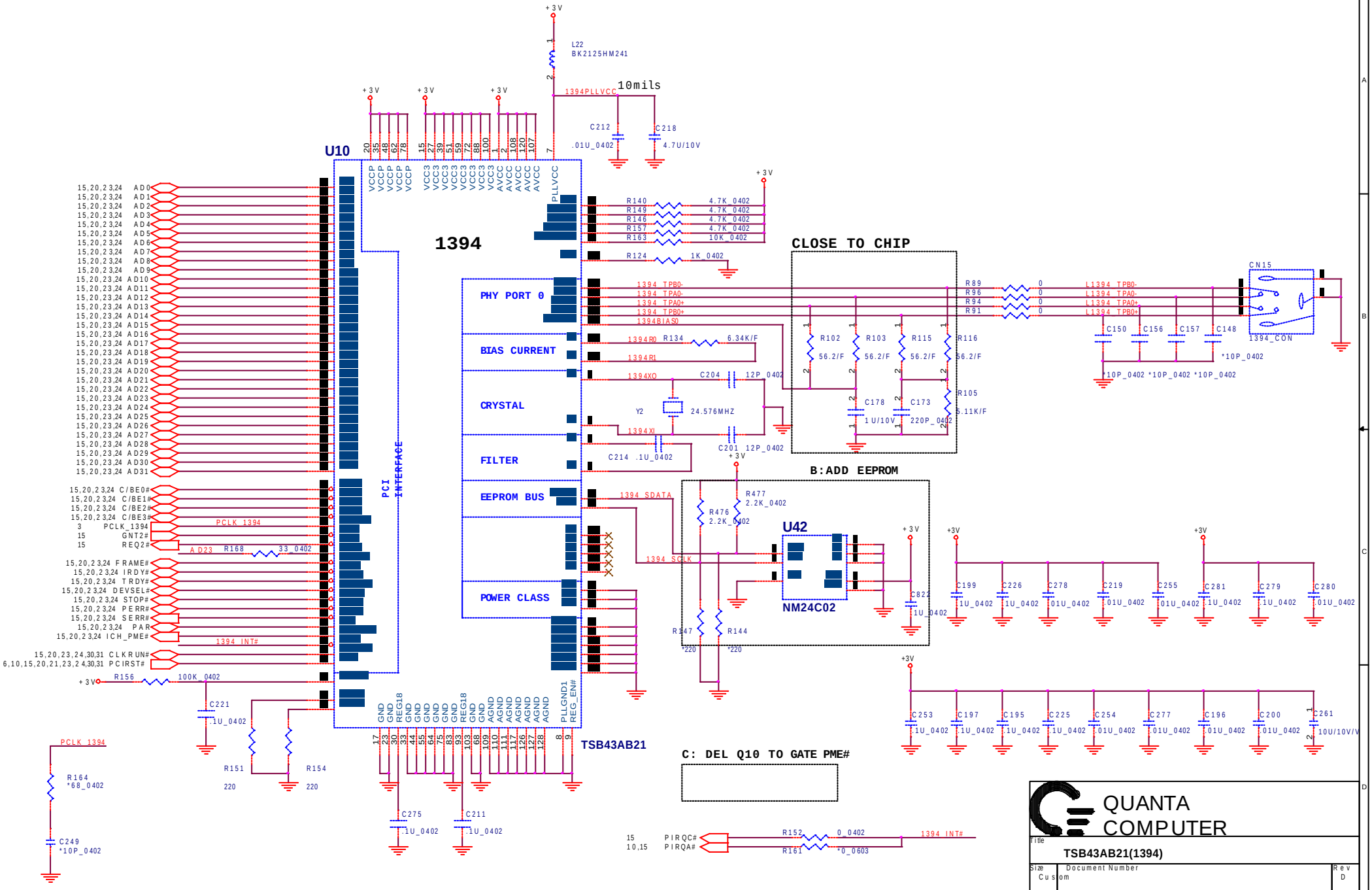

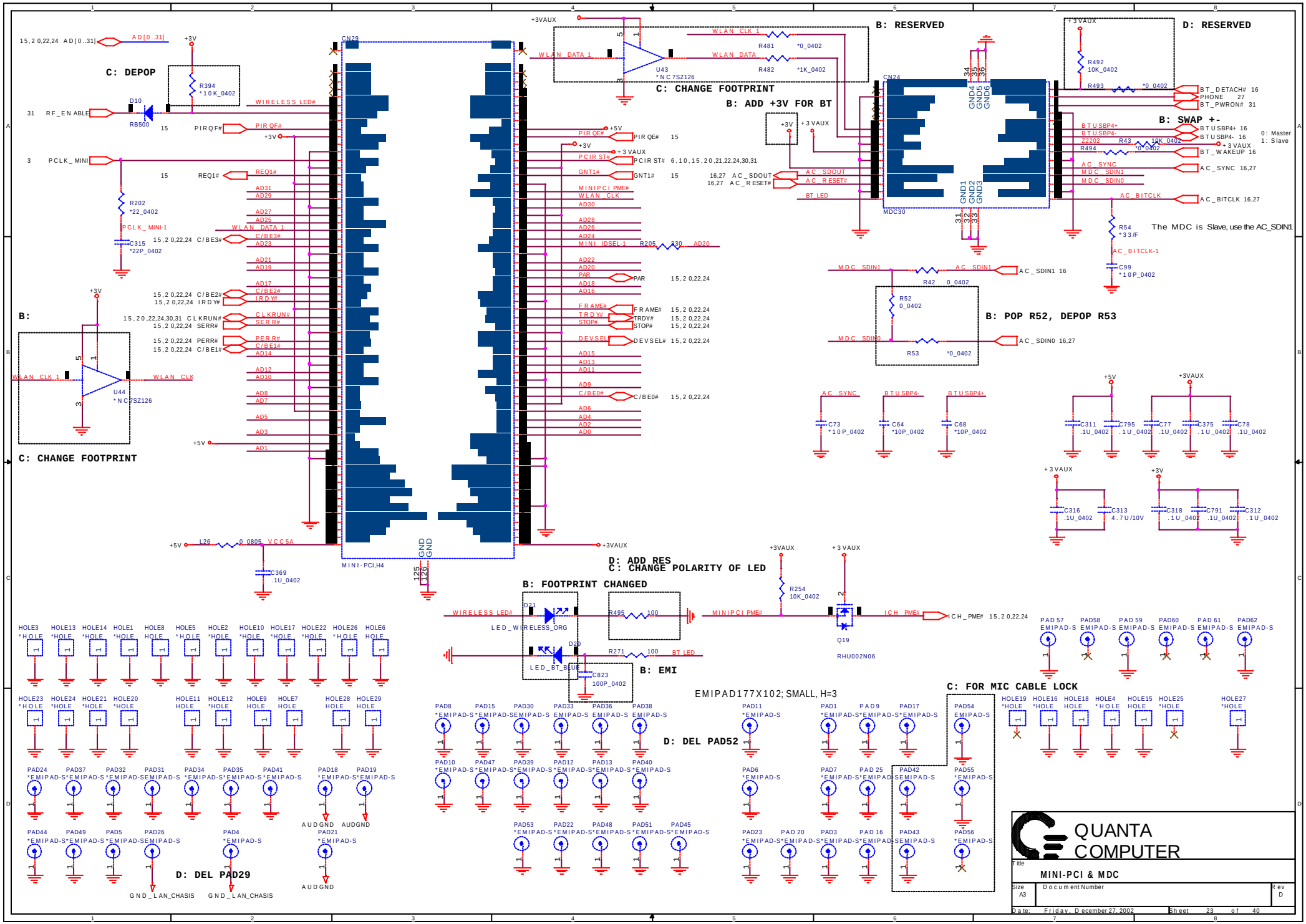
C: DEPOP
B: RESERVED
D: RESERVED
C: CHANGE FOOTPRINT
B: ADD +3V FOR BT
B: SWAP +-
0: Master
1: Slave
The MDC is Slave, use the AC_SDIN1
B: POP R52, DEPOP R53
B:
C: CHANGE FOOTPRINT
D: ADD RES
C: CHANGE POLARITY OF LED
B: FOOTPRINT CHANGED
B: EMI
EMIPAD177X102; SMALL, H=3
C: FOR MIC CABLE LOCK
D: DEL PAD52
D: DEL PAD29
MINI-PCI,H4
QUANTA COMPUTER
Title
MINI-PCI & MDC
Size A3
Document Number
Rev D
Date: Friday, December 27, 2002
Sheet 23 of 40

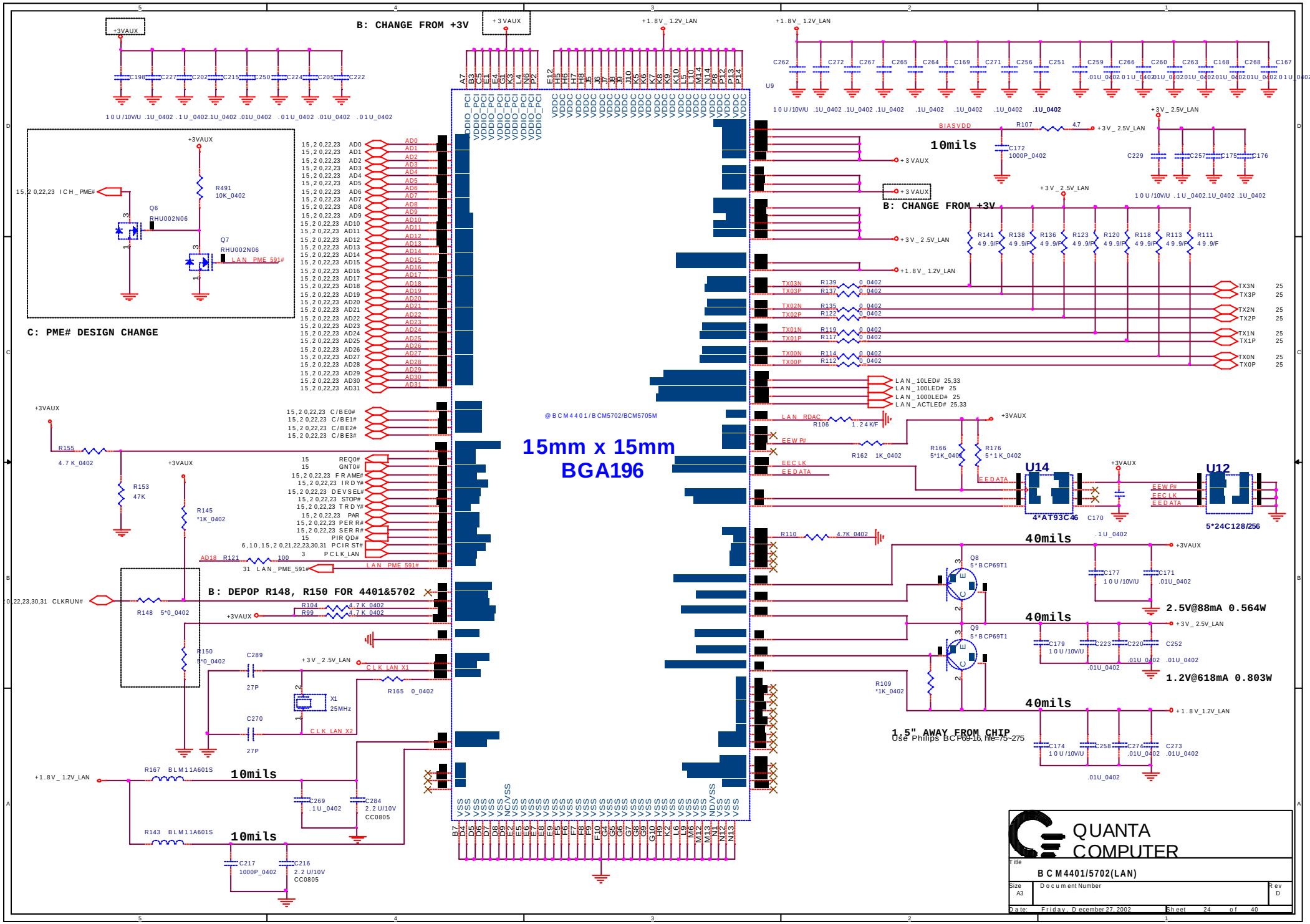
B: CHANGE FROM +3V
C: PME# DESIGN CHANGE
B: DEPOP R148, R150 FOR 4401&5702
15mm x 15mm
BGA196
@BCM4401/BCM5702/BCM5705M
10mils
40mils
1.5" AWAY FROM CHIP
Use Philips BCP69-16, ME=75~275
2.5V@88mA 0.564W
1.2V@618mA 0.803W
U14
4*AT93C46
U12
5*24C128/256
QUANTA COMPUTER
BCM4401/5702(LAN)
Size A3
Document Number
Rev D
Date: Friday, December 27, 2002
Sheet 24 of 40

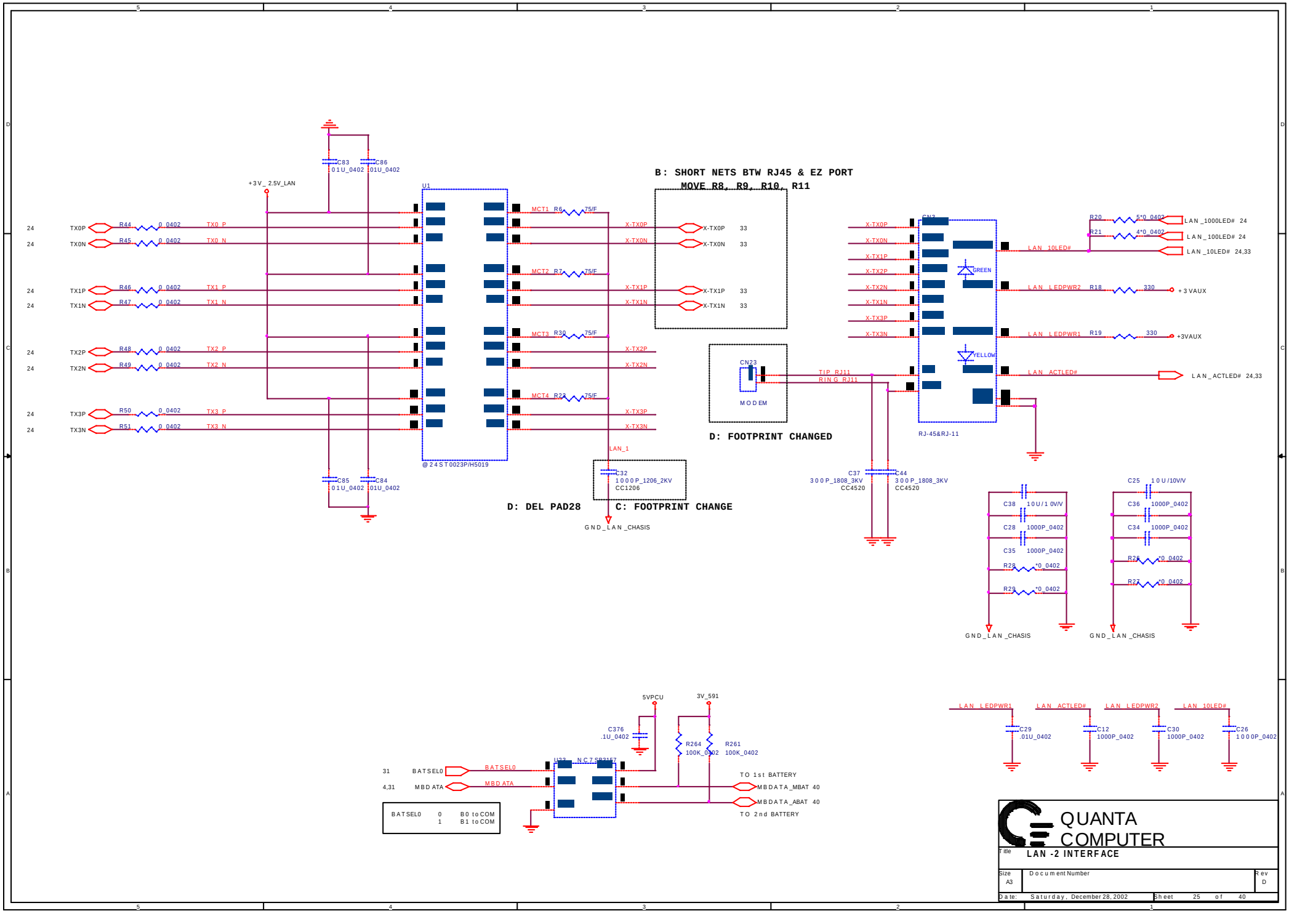
B: SHORT NETS BTW RJ45 & EZ PORT
MOVE R8, R9, R10, R11
D: FOOTPRINT CHANGED
D: DEL PAD28
C: FOOTPRINT CHANGE
+3V_2.5V_LAN
U1
@24ST0023P/H5019
MODEM
RJ-45&RJ-11
GND_LAN_CHASIS
TO 1st BATTERY
TO 2nd BATTERY
BATSEL0 0 B0 to COM
1 B1 to COM
QUANTA COMPUTER
Title LAN -2 INTERFACE
Size A3
Document Number
Rev D
Date: Saturday, December 28, 2002
Sheet 25 of 40

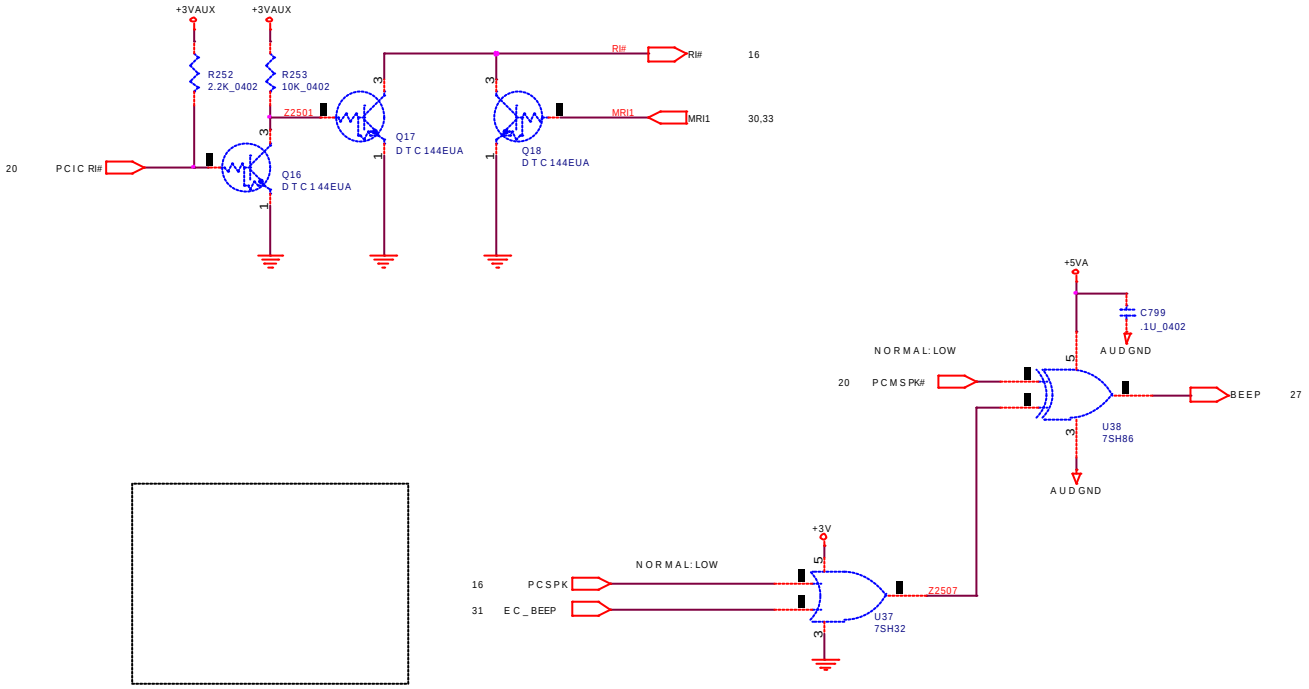

B: REMOVE BEEP CIRCUITS

QUANTA COMPUTER

Title: **AUDIO POWER & BEEP**

Size	Document Number	Rev
A3		D

Date: Friday, December 27, 2002 Sheet 26 of 40

External Clock	ID1	ID0
48MHz	X	low
14.318MHz	low	x
24.576MHz	x	x

ALC202

B: REMOVE SPDIF

B: DISCONNECTED WITH SHUTDOWN# NET

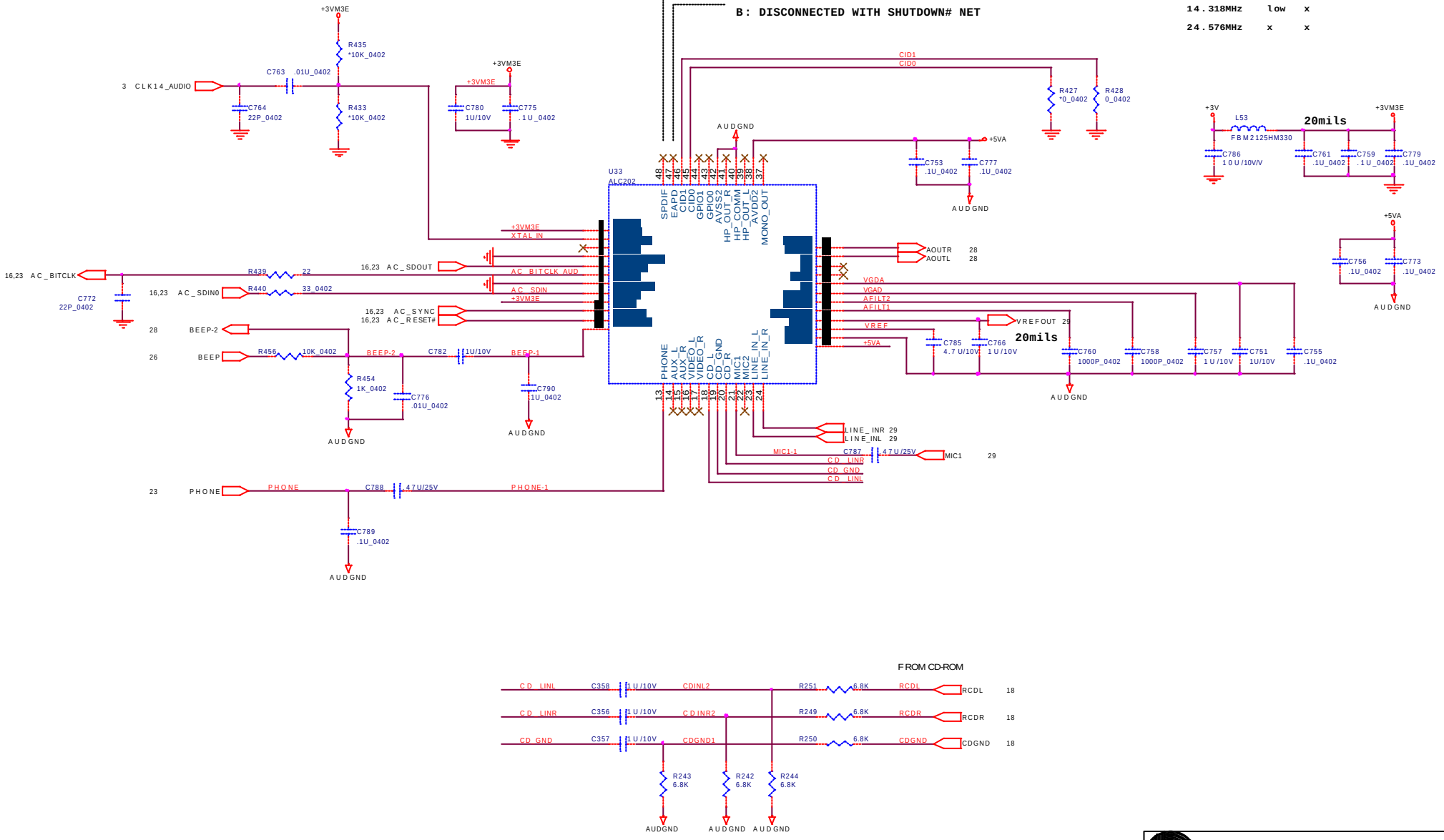

QUANTA COMPUTER

Title: AUDIO CONTROLLER[ESS1988]

Size: A3 | Document Number | Rev: D

Date: Friday, December 27, 2002 | Sheet 27 of 40

Audio Amplifier

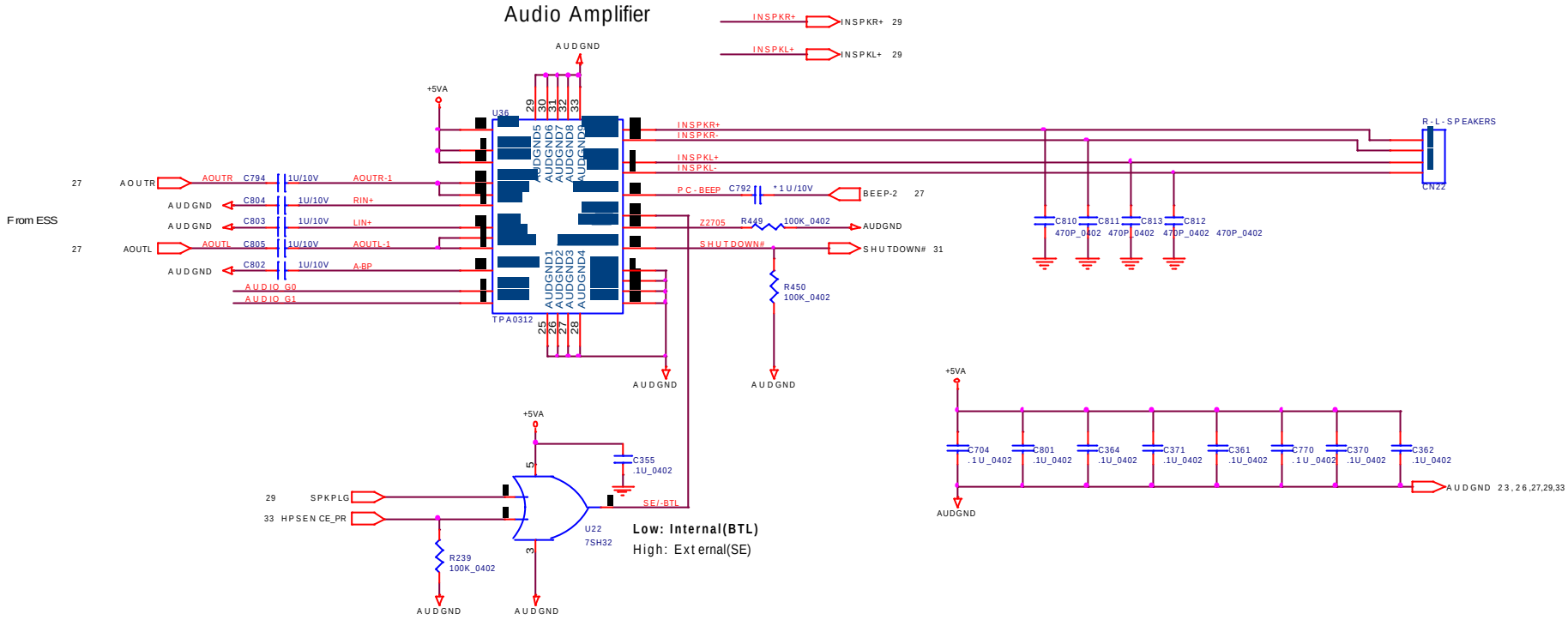

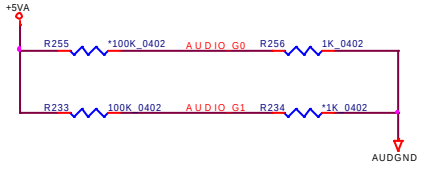

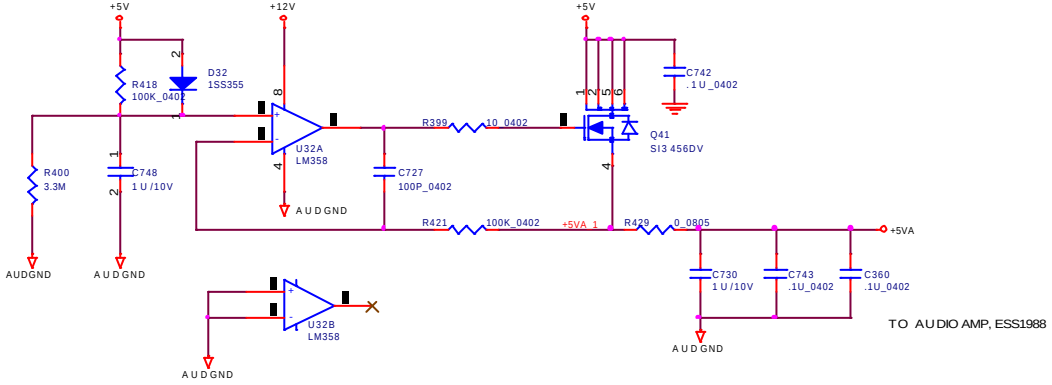

GAIN0	GAIN1	AV
0	0	6dB
0	**1**	**10dB**
1	0	15.6dB
1	1	21.6dB

QUANTA COMPUTER

Title: AUDIO AMP

Size: A3 | Document Number | Rev: D

Date: Friday, December 27, 2002 | Sheet 28 of 40

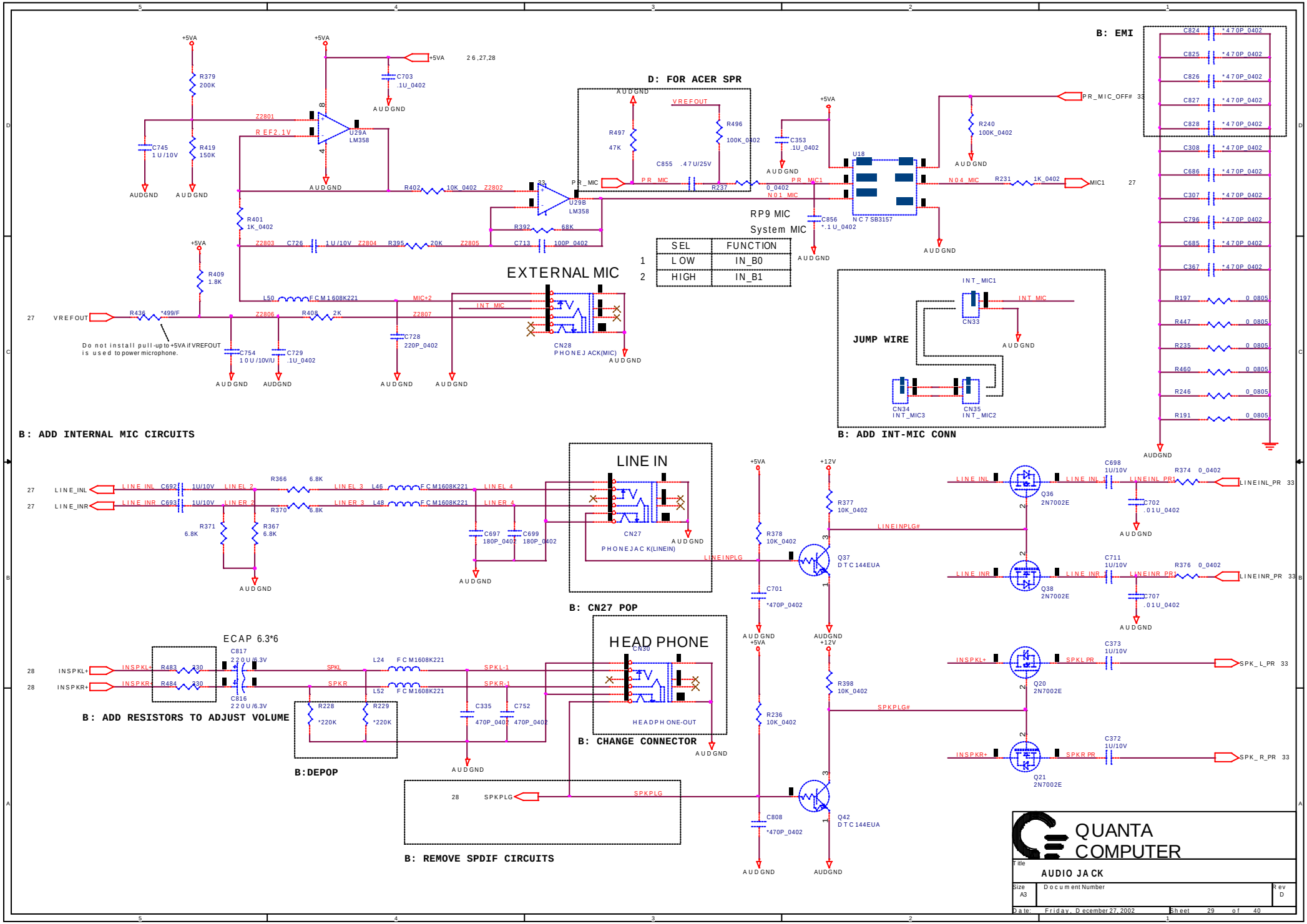

SEL	FUNCTION
LOW	IN_B0
HIGH	IN_B1

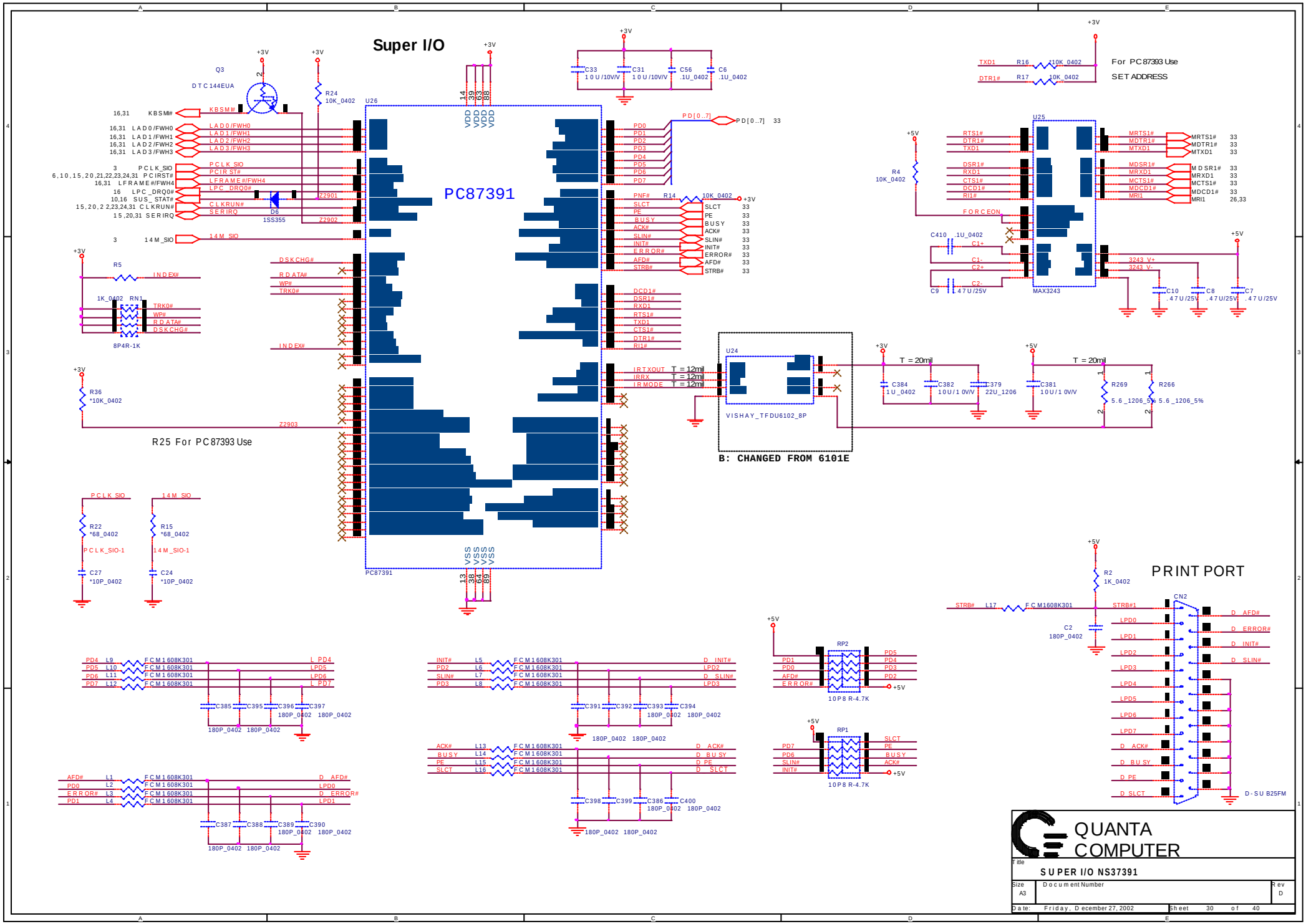
Super I/O
PC87391
U26
Q3
DTC144EUA
KBSMI#
LAD0/FWH0
LAD1/FWH1
LAD2/FWH2
LAD3/FWH3
PCLK_SIO
PCIRST#
LFRAME#/FWH4
LPC_DRQ0#
SUS_STAT#
CLKRUN#
SERIRQ
14M_SIO
D6
1SS355
Z2901
Z2902
Z2903
R24
10K_0402
R5
INDEX#
1K_0402
RN1
8P4R-1K
TRK0#
WP#
RDATA#
DSKCHG#
R36
*10K_0402
R25 For PC87393 Use
R22
*68_0402
PCLK_SIO-1
C27
*10P_0402
R15
*68_0402
14M_SIO-1
C24
*10P_0402
C33
10U/10V/V
C31
10U/10V/V
C56
.1U_0402
C6
.1U_0402
PD[0..7]
PNF#
R14
10K_0402
SLCT
PE
BUSY
ACK#
SLIN#
INIT#
ERROR#
AFD#
STRB#
DCD1#
DSR1#
RXD1
RTS1#
TXD1
CTS1#
DTR1#
RI1#
IRTXOUT
IRRX
IRMODE
T = 12mil
U24
VISHAY_TFDU6102_8P
B: CHANGED FROM 6101E
TXD1
R16
10K_0402
DTR1#
R17
10K_0402
For PC87393 Use
SET ADDRESS
U25
MRTS1#
MDTR1#
MTXD1
MDSR1#
MRXD1
MCTS1#
MDCD1#
MRI1
FORCEON
C410
.1U_0402
C1+
C1-
C2+
C2-
C9
1.47U/25V
MAX3243
3243_V+
3243_V-
C10
.47U/25V
C8
.47U/25V
C7
.47U/25V
R4
10K_0402
C384
1U_0402
C382
10U/10V/V
C379
22U_1206
C381
10U/10V/V
R269
5.6_1206_5%
R266
5.6_1206_5%
T = 20mil
PRINT PORT
CN2
D-SUB25FM
R2
1K_0402
C2
180P_0402
STRB#
L17
FCM1608K301
STRB#1
LPD0
LPD1
LPD2
LPD3
LPD4
LPD5
LPD6
LPD7
D_ACK#
D_BUSY
D_PE
D_SLCT
D_AFD#
D_ERROR#
D_INIT#
D_SLIN#
RP2
10P8R-4.7K
RP1
10P8R-4.7K
PD4
PD5
PD6
PD7
L PD4
LPD5
LPD6
L PD7
C385
C395
C396
C397
180P_0402
INIT#
PD2
SLIN#
PD3
D_INIT#
D_SLIN#
C391
C392
C393
C394
ACK#
BUSY
PE
SLCT
D_ACK#
D_BUSY
D_PE
D_SLCT
C398
C399
C386
C400
AFD#
PD0
ERROR#
PD1
D_AFD#
D_ERROR#
C387
C388
C389
C390
QUANTA COMPUTER
Title
SUPER I/O NS37391
Size
A3
Document Number
Rev
D
Date: Friday, December 27, 2002
Sheet 30 of 40

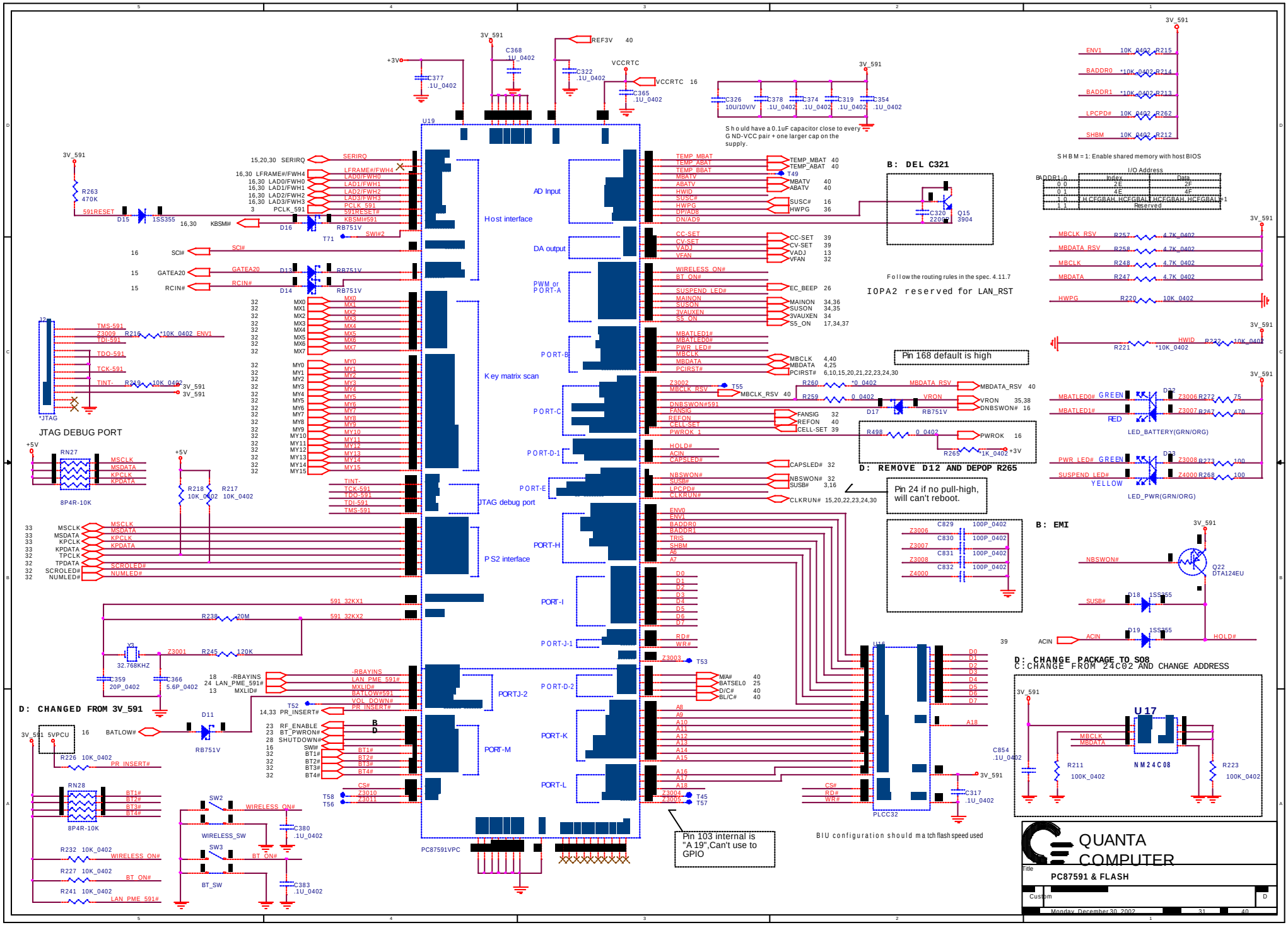
U19
PC87591VPC
Host interface
AD Input
DA output
PWM or PORT-A
PORT-B
Key matrix scan
PORT-C
PORT-D-1
PORT-E
JTAG debug port
PORT-H
PS2 interface
PORT-I
PORT-J-1
PORTJ-2
PORT-D-2
PORT-K
PORT-M
PORT-L
JTAG DEBUG PORT
*JTAG
B: DEL C321
Follow the routing rules in the spec. 4.11.7
IOPA2 reserved for LAN_RST
Pin 168 default is high
D: REMOVE D12 AND DEPOP R265
Pin 24 if no pull-high, will can't reboot.
Pin 103 internal is "A19",Can't use to GPIO
D: CHANGED FROM 3V_591
B: EMI
D: CHANGE PACKAGE TO SO8
C:CHANGE FROM 24C02 AND CHANGE ADDRESS
U17
NM24C08
U16
PLCC32
BIU configuration should match flash speed used
Should have a 0.1uF capacitor close to every GND-VCC pair + one larger cap on the supply.
SHBM = 1: Enable shared memory with host BIOS
I/O Address
LED_BATTERY(GRN/ORG)
LED_PWR(GRN/ORG)
QUANTA COMPUTER
Title
PC87591 & FLASH
Custom
D
Monday, December 30, 2002
31
40

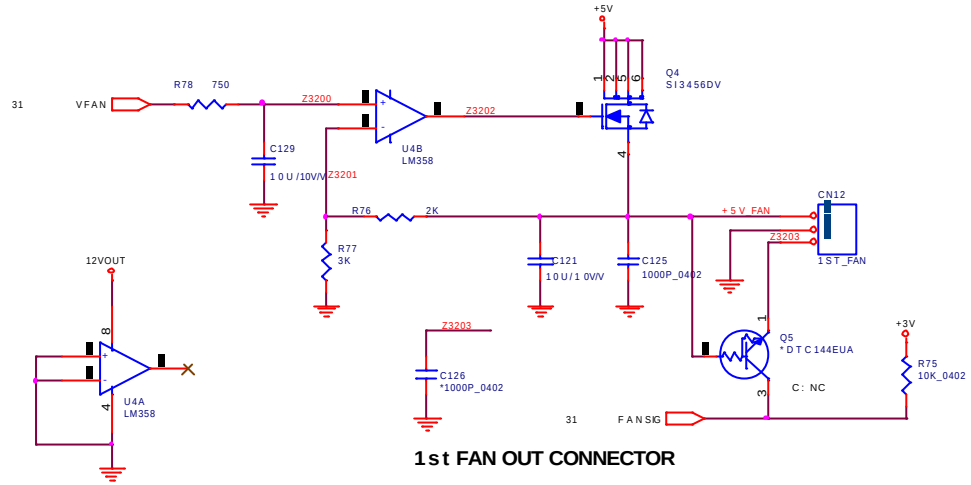

1st FAN OUT CONNECTOR

B: FOOTPRINT CHANGED

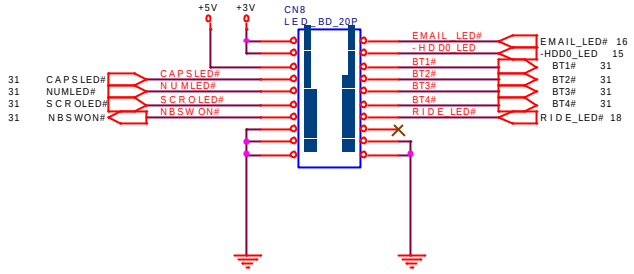

TO LED BOARD 30P

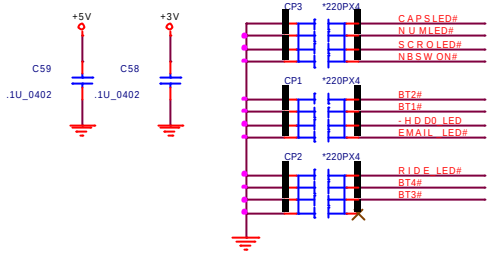

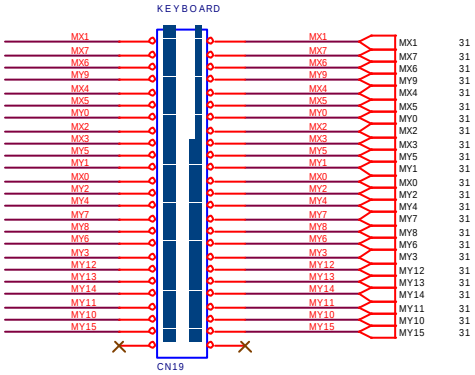

KEYBOARD

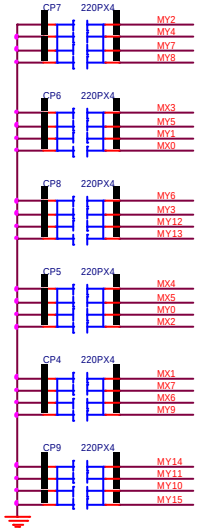

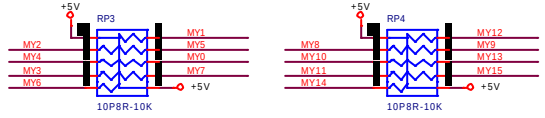

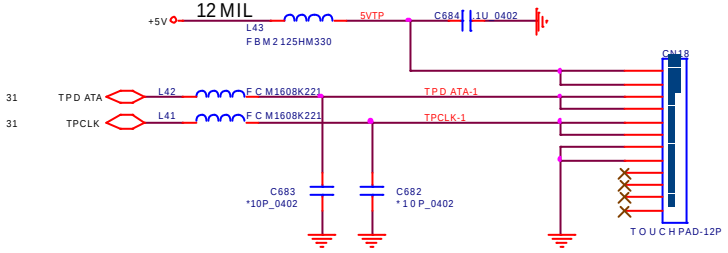

TOUCH PAD

QUANTA COMPUTER

Title	K/B ,FDD ,FANCON
Size A3	Document Number
Rev D	
Date: Friday, December 27, 2002	Sheet 32 of 40

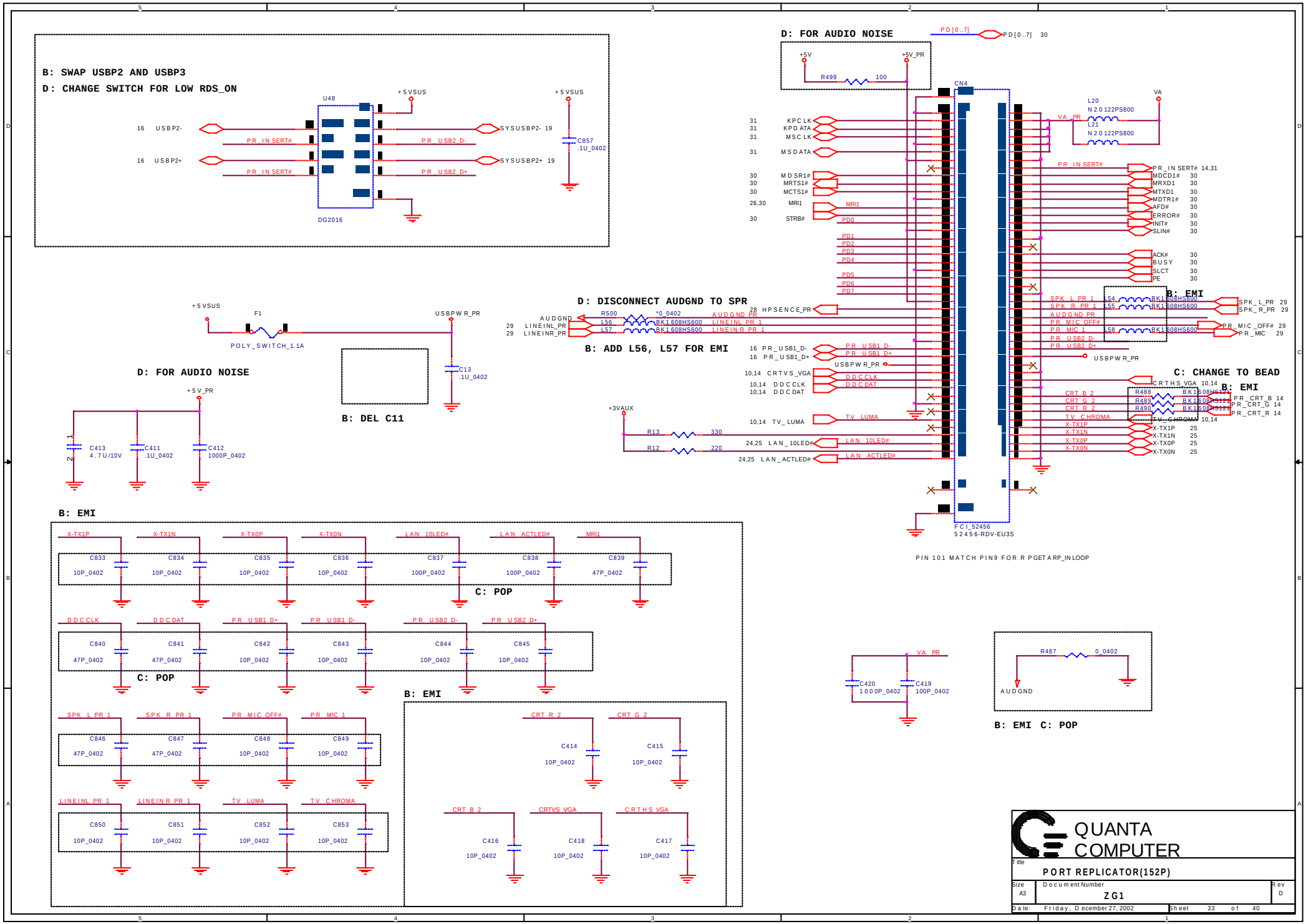
B: SWAP USBP2 AND USBP3
D: CHANGE SWITCH FOR LOW RDS_ON
U48
DG2016
+5VSUS
16 USBP2-
16 USBP2+
PR_INSERT#
PR_USB2_D-
PR_USB2_D+
SYSUSBP2- 19
SYSUSBP2+ 19
C857 .1U_0402
D: FOR AUDIO NOISE
PD[0..7]
+5V
+5V_PR
R499 100
CN4
VA
L20 N20122PS800
L21 N20122PS800
VA_PR
31 KPCLK
31 KPDATA
31 MSCLK
31 MSDATA
30 MDSR1#
30 MRTS1#
30 MCTS1#
26,30 MRI1
30 STRB#
PD0
PD1
PD2
PD3
PD4
PD5
PD6
PD7
PR_INSERT# 14,31
MDCD1# 30
MRXD1 30
MTXD1 30
MDTR1# 30
AFD# 30
ERROR# 30
INIT# 30
SLIN# 30
ACK# 30
BUSY 30
SLCT 30
PE 30
B: EMI
SPK_L_PR 29
SPK_R_PR 29
PR_MIC_OFF# 29
PR_MIC 29
BK1608HS600
USBPWR_PR
C: CHANGE TO BEAD
CRTHS_VGA 10,14
CRT_B 2
CRT_G 2
CRT_R 2
TV_CHROMA
X-TX1P 25
X-TX1N 25
X-TX0P 25
X-TX0N 25
R488
R489
R490
PR_CRT_B 14
PR_CRT_G 14
PR_CRT_R 14
FCI_52456
52456-RDV-EU3S
PIN 101 MATCH PIN9 FOR RPGETARP_INLOOP
D: DISCONNECT AUDGND TO SPR
28 HPSENCE_PR
AUDGND
R500 *0_0402
AUDGND_PR
29 LINEINL_PR
29 LINEINR_PR
L56 BK1608HS600
L57 BK1608HS600
LINEINL_PR_1
LINEINR_PR_1
B: ADD L56, L57 FOR EMI
16 PR_USB1_D-
16 PR_USB1_D+
PR_USB1_D-
PR_USB1_D+
10,14 CRTVS_VGA
10,14 DDCCLK
10,14 DDCDAT
DDCCLK
DDCDAT
10,14 TV_LUMA
TV_LUMA
+3VAUX
R13 330
R12 220
24,25 LAN_10LED#
24,25 LAN_ACTLED#
LAN_10LED#
LAN_ACTLED#
+5VSUS
F1
POLY_SWITCH_1.1A
USBPWR_PR
C13 .1U_0402
B: DEL C11
D: FOR AUDIO NOISE
+5V_PR
C413 4.7U/10V
C411 .1U_0402
C412 1000P_0402
B: EMI
X-TX1P
X-TX1N
X-TX0P
X-TX0N
LAN_10LED#
LAN_ACTLED#
MRI1
C833 10P_0402
C834 10P_0402
C835 10P_0402
C836 10P_0402
C837 100P_0402
C838 100P_0402
C839 47P_0402
C: POP
DDCCLK
DDCDAT
PR_USB1_D+
PR_USB1_D-
PR_USB2_D-
PR_USB2_D+
C840 47P_0402
C841 47P_0402
C842 10P_0402
C843 10P_0402
C844 10P_0402
C845 10P_0402
C: POP
B: EMI
SPK_L_PR_1
SPK_R_PR_1
PR_MIC_OFF#
PR_MIC_1
C846 47P_0402
C847 47P_0402
C848 10P_0402
C849 10P_0402
LINEINL_PR_1
LINEINR_PR_1
TV_LUMA
TV_CHROMA
C850 10P_0402
C851 10P_0402
C852 10P_0402
C853 10P_0402
B: EMI
CRT_R 2
CRT_G 2
C414 10P_0402
C415 10P_0402
CRT_B 2
CRTVS_VGA
CRTHS_VGA
C416 10P_0402
C418 10P_0402
C417 10P_0402
VA_PR
C420 1000P_0402
C419 100P_0402
R487 0_0402
AUDGND
B: EMI C: POP
QUANTA COMPUTER
Title
PORT REPLICATOR(152P)
Size A3
Document Number ZG1
Rev D
Date: Friday, December 27, 2002
Sheet 33 of 40

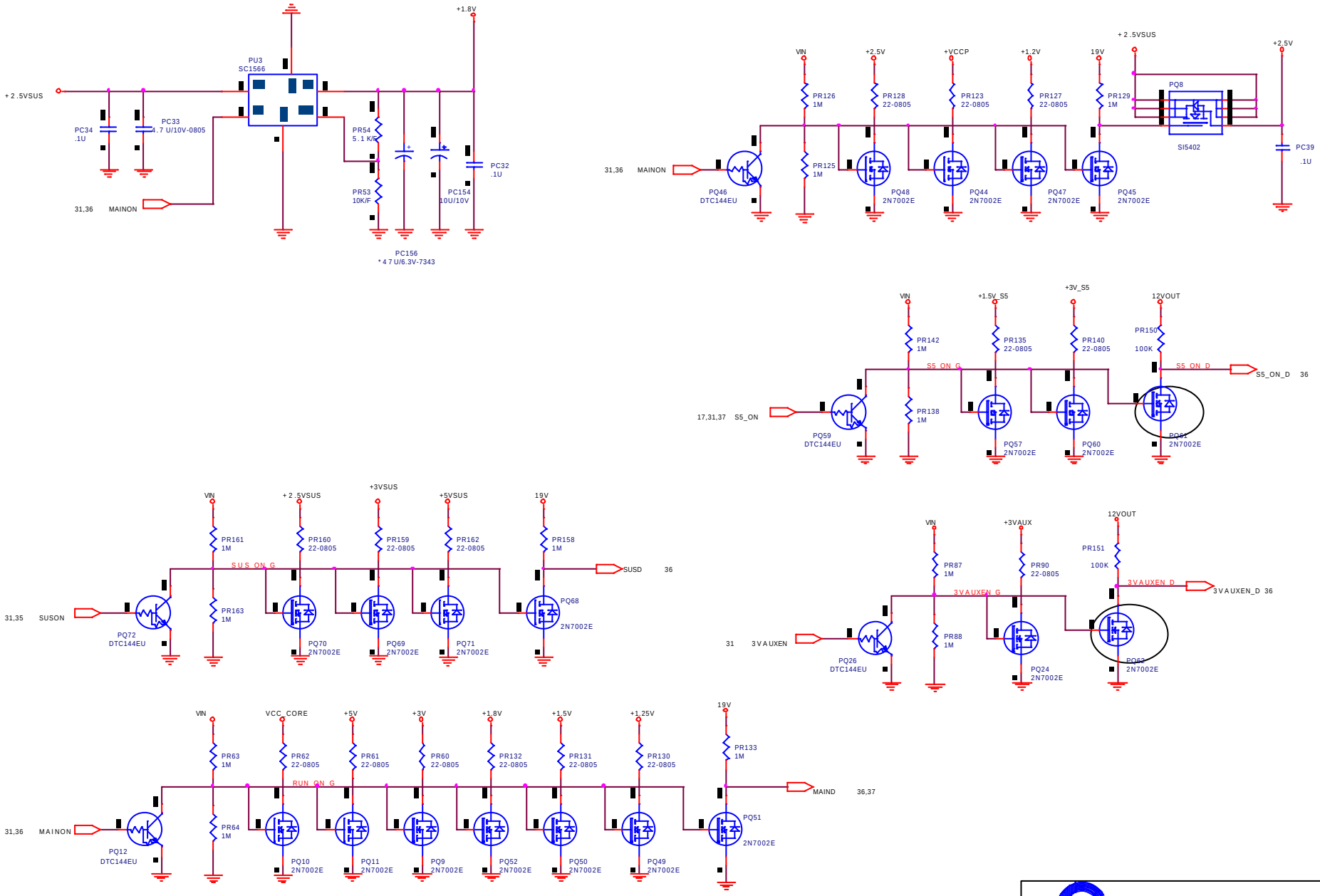

PROJECT : ZG1

Quanta Computer Inc.

Size	Document Number	Rev
Custom	DISCHARGE CIRCUIT	D
Date: Friday, December 27, 2002	Sheet 34 of 40	

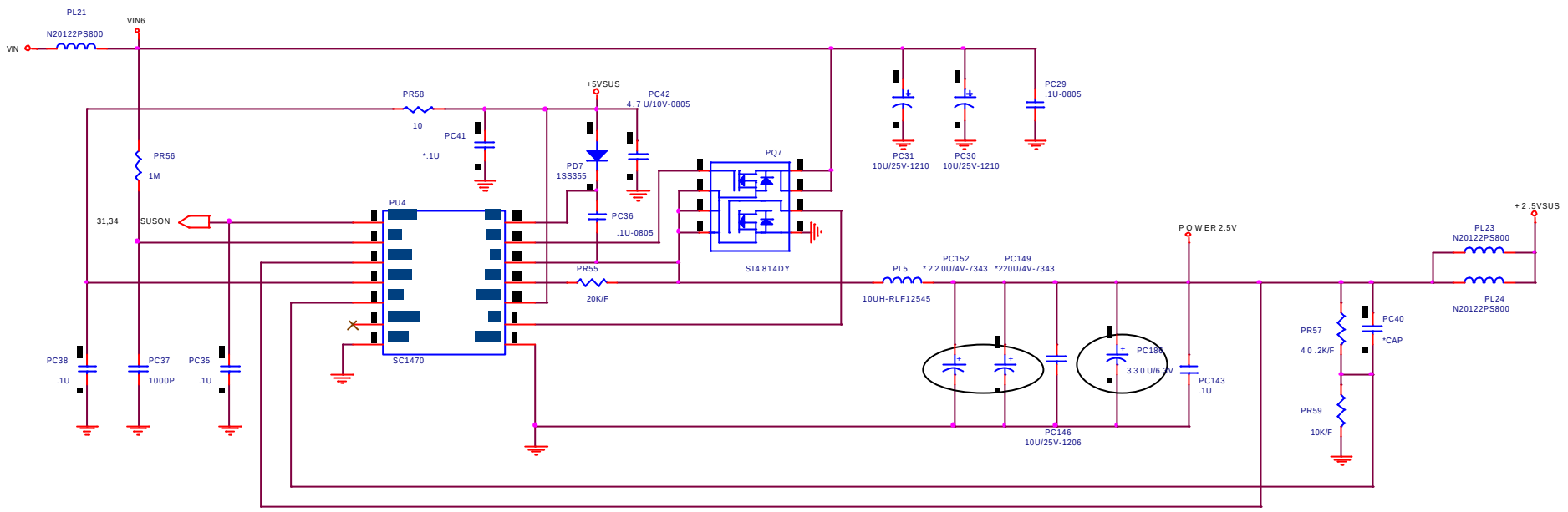

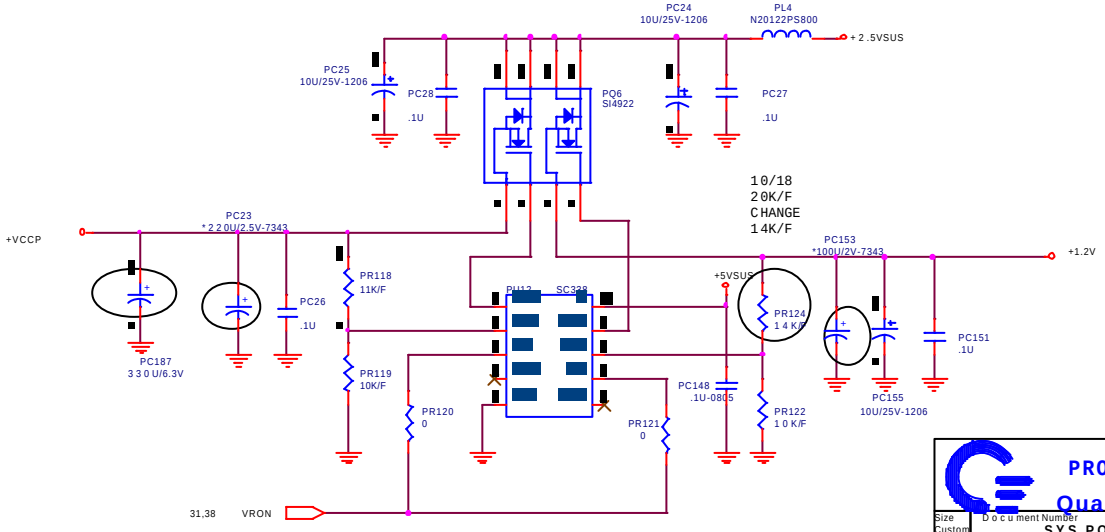

PROJECT : ZG1

Quanta Computer Inc.

Size	Document Number	Rev
Custom	SYS POWER 2.5V& CPUIO	D
Date: Friday, December 27, 2002	Sheet 35 of 40	

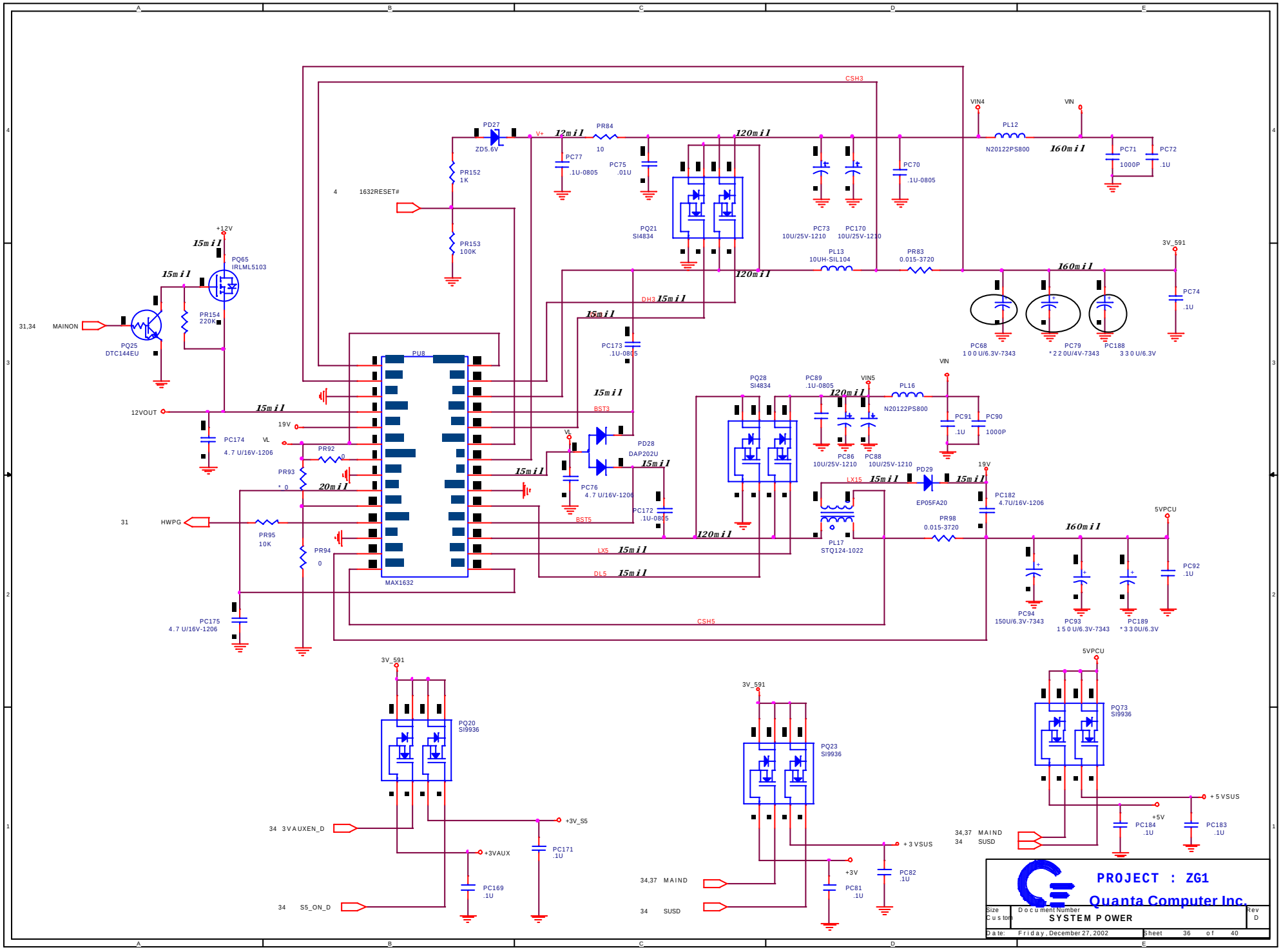
PROJECT : ZG1
Quanta Computer Inc.
SYSTEM POWER
Size Custom
Document Number
Rev D
Date: Friday, December 27, 2002
Sheet 36 of 40
MAX1632
PU8
PQ21 SI4834
PQ28 SI4834
PQ20 SI9936
PQ23 SI9936
PQ73 SI9936
PQ65 IRLML5103
PQ25 DTC144EU
PD27 ZD5.6V
PD28 DAP202U
PD29 EP05FA20
PL12 N20122PS800
PL13 10UH-SIL104
PL16 N20122PS800
PL17 STQ124-1022
PR83 0.015-3720
PR98 0.015-3720
PR152 1K
PR153 100K
PR154 220K
PR84 10
PR92 0
PR93 * 0
PR94 0
PR95 10K
PC68 1 0 0 U/6.3V-7343
PC79 * 2 2 0U/4V-7343
PC188 3 3 0 U/6.3V
PC94 150U/6.3V-7343
PC93 1 5 0 U/6.3V-7343
PC189 * 3 3 0U/6.3V
PC174 4.7 U/16V-1206
PC175 4.7 U/16V-1206
PC182 4.7U/16V-1206
PC86 10U/25V-1210
PC88 10U/25V-1210
PC73 10U/25V-1210
PC170 10U/25V-1210
PC71 1000P
PC72 .1U
PC74 .1U
PC91 .1U
PC90 1000P
PC92 .1U
PC184 .1U
PC183 .1U
PC171 .1U
PC169 .1U
PC82 .1U
PC81 .1U
PC77 .1U-0805
PC75 .01U
PC70 .1U-0805
PC173 .1U-0805
PC89 .1U-0805
PC172 .1U-0805
PC76 4.7 U/16V-1206
CSH3
CSH5
DH3
BST3
BST5
LX5
DL5
LX15
V+
VL
VIN
VIN4
VIN5
12VOUT
19V
+12V
3V_591
5VPCU
+3V_S5
+3VAUX
+3 VSUS
+5 VSUS
+3V
+5V
1632RESET#
MAINON
HWPG
3 3VAUXEN_D
S5_ON_D
MAIND
SUSD
12mil
15mil
20mil
120mil
160mil

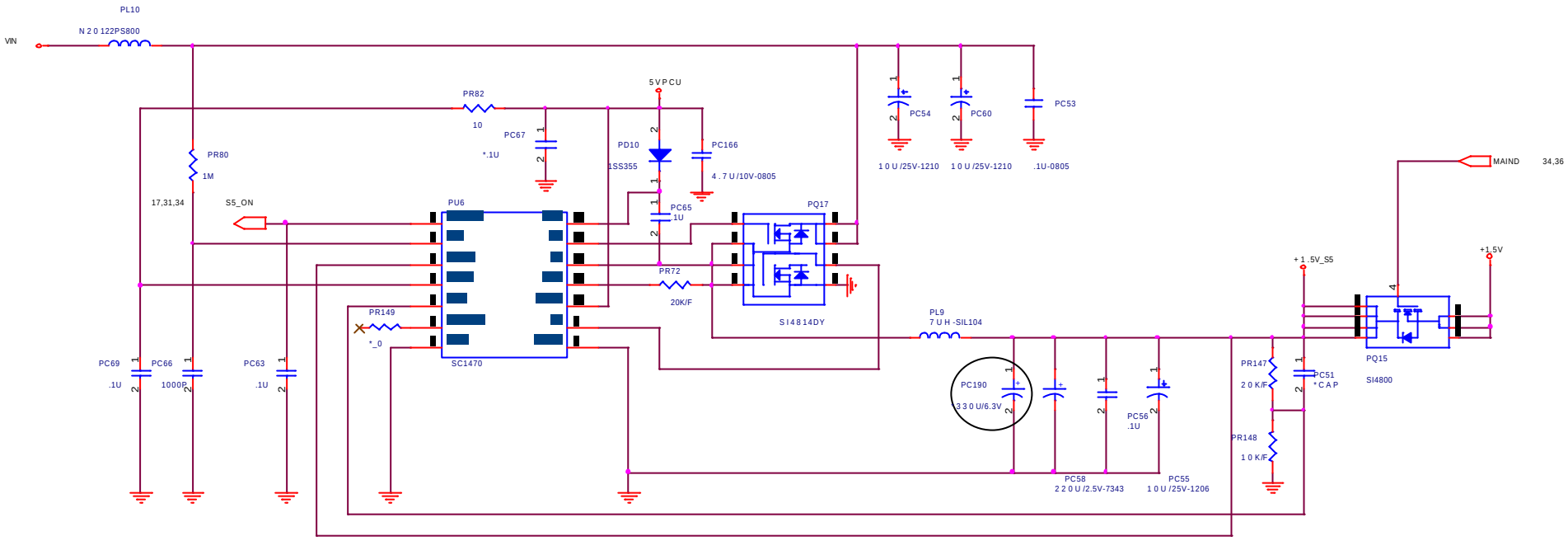

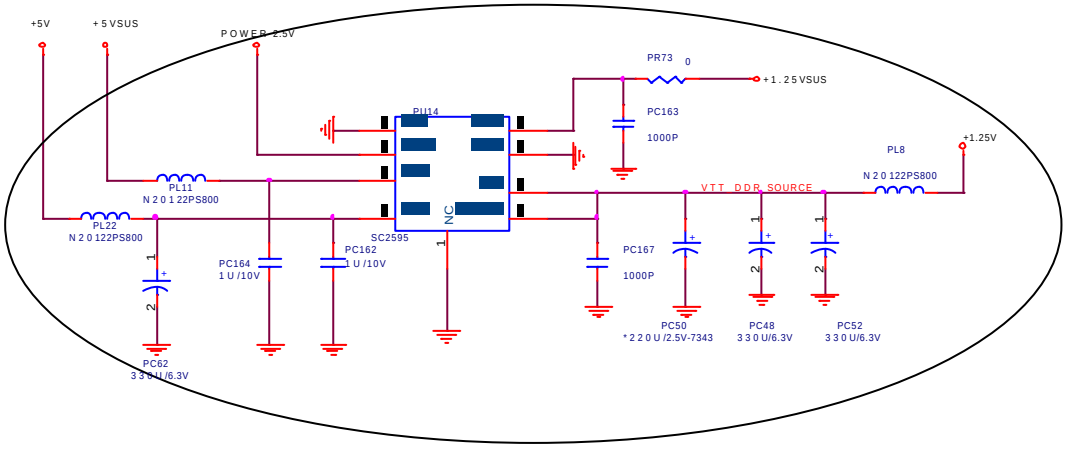

PROJECT : ZG1

Quanta Computer Inc.

Size	Document Number	Rev
Custom	POWER 1.5V & DDR	D
Date: Friday, December 27, 2002	Sheet 37 of 40	

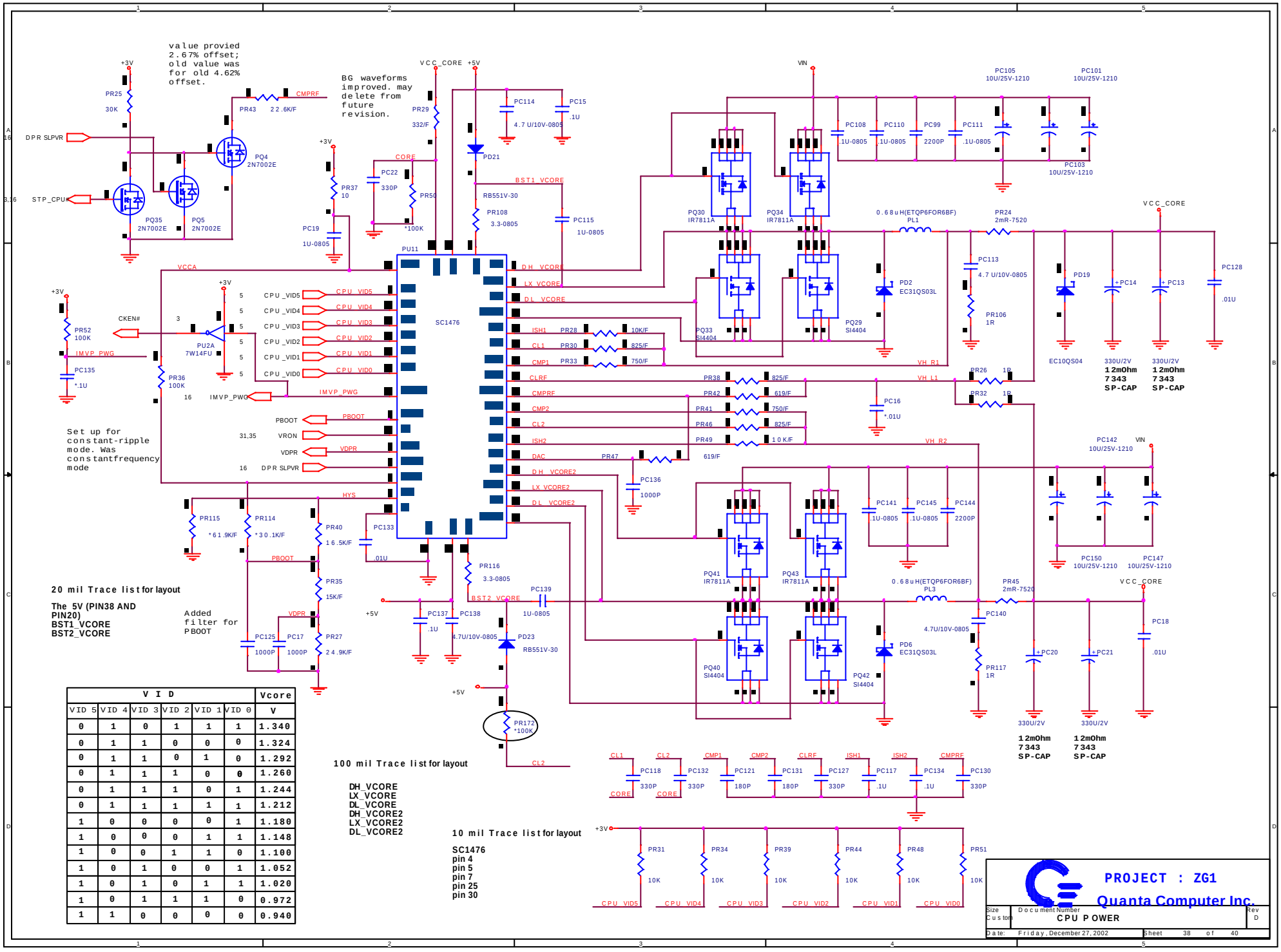

V I D						Vcore
VID 5	VID 4	VID 3	VID 2	VID 1	VID 0	V
0	1	0	1	1	1	1.340
0	1	1	0	0	0	1.324
0	1	1	0	1	0	1.292
0	1	1	1	0	0	1.260
0	1	1	1	0	1	1.244
0	1	1	1	1	1	1.212
1	0	0	0	0	1	1.180
1	0	0	0	1	1	1.148
1	0	0	1	1	0	1.100
1	0	1	0	0	1	1.052
1	0	1	0	1	1	1.020
1	0	1	1	1	0	0.972
1	1	0	0	0	0	0.940

PROJECT : ZG1

Quanta Computer Inc.

Size: Custom | Document Number: CPU POWER | Rev: D

Date: Friday, December 27, 2002 | Sheet 38 of 40

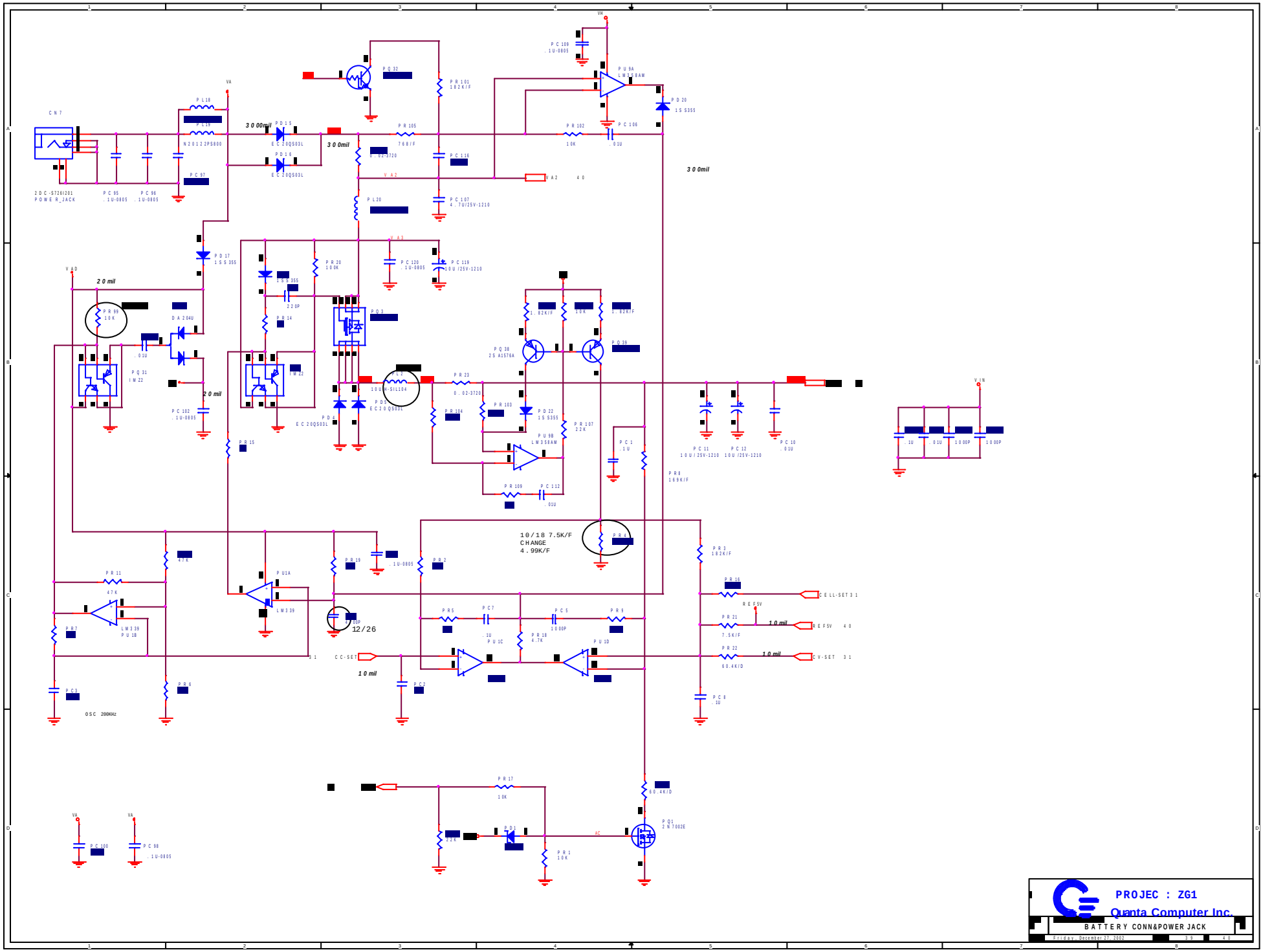

PROJEC : ZG1

Quanta Computer Inc.

BATTERY CONN&POWER JACK

Friday, December 27, 2002 3 3 4 0

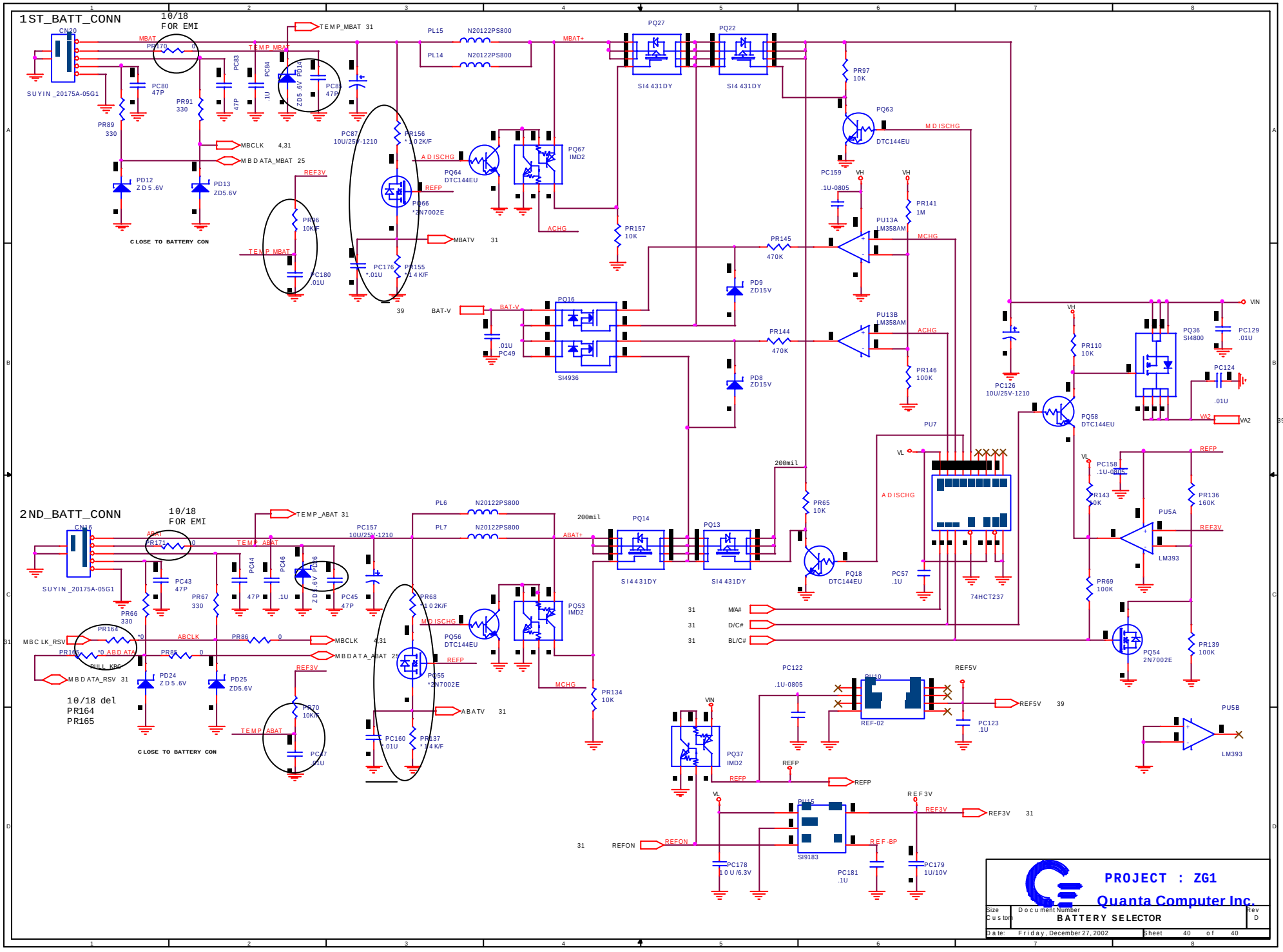

PROJECT : ZG1

Quanta Computer Inc.

Size	Document Number	Rev
Custom	BATTERY SELECTOR	D
Date: Friday, December 27, 2002	Sheet 40 of 40	